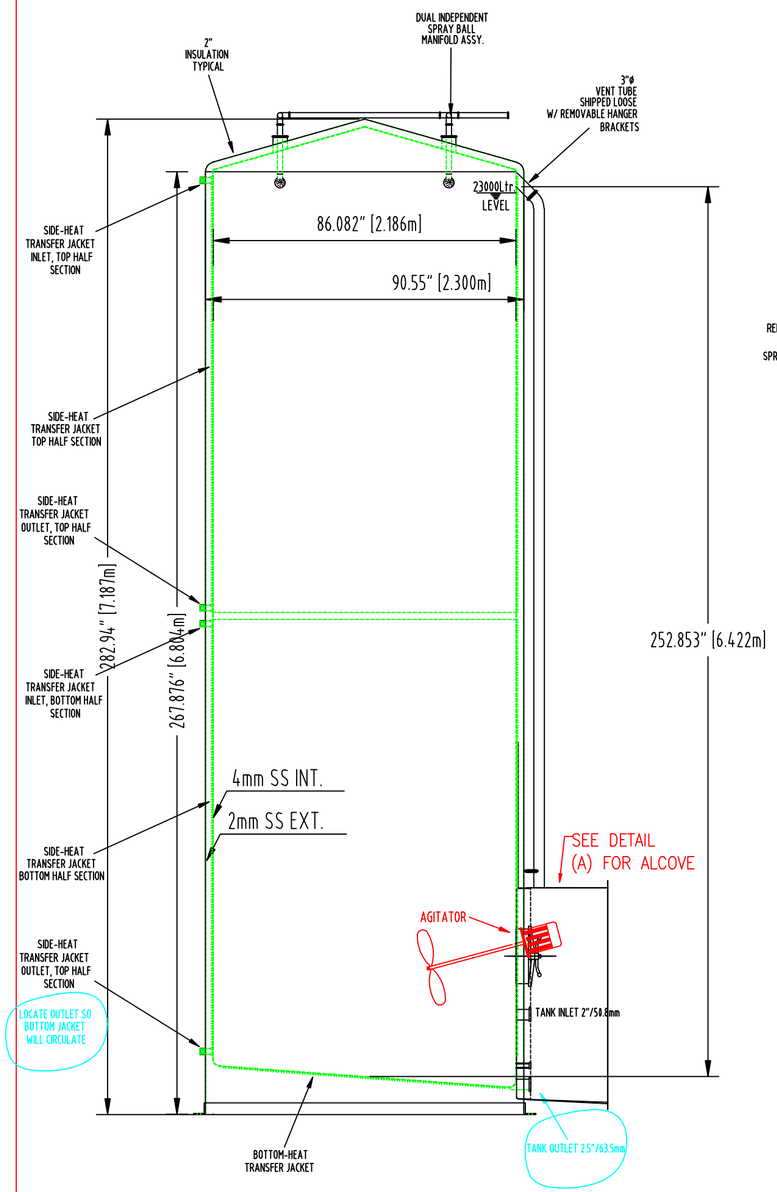

SIDE VIEW

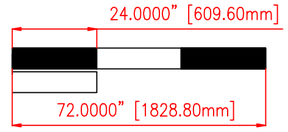

Bar Scale

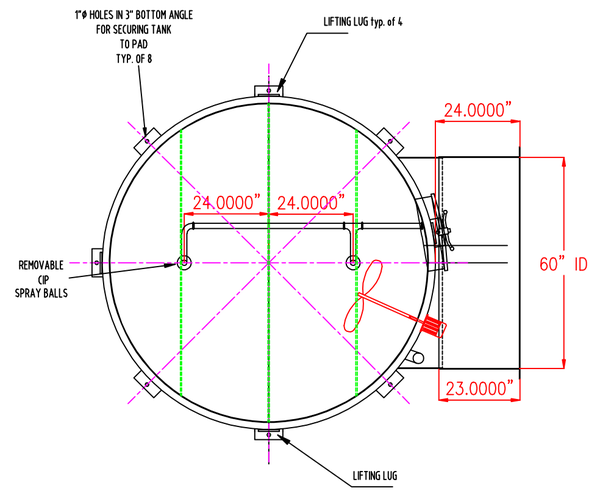

TOP VIEW

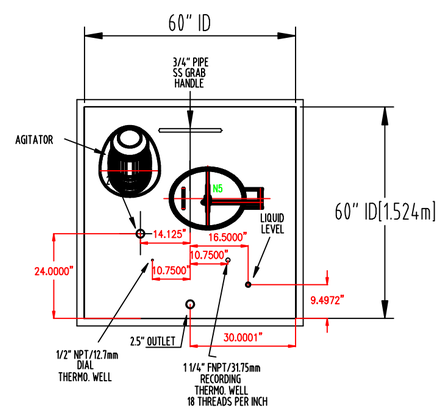

FRONT VIEW

DETAIL (A)

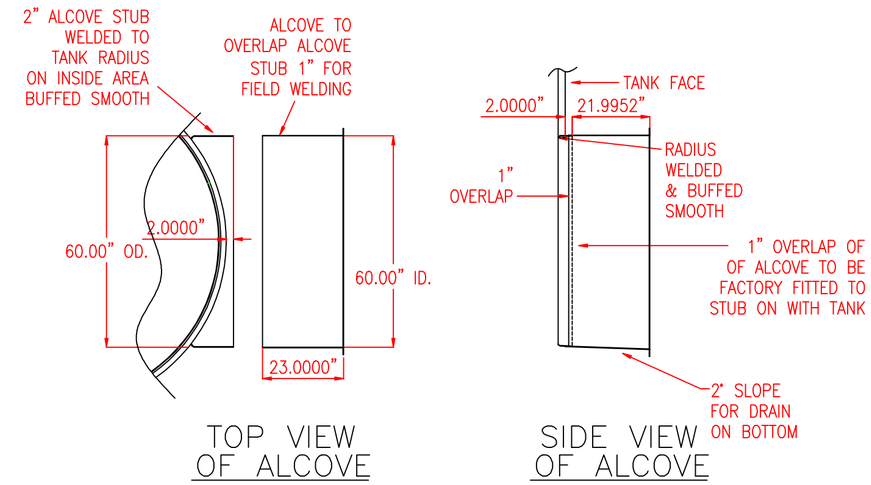

TOP VIEW OF ALCOVE

SIDE VIEW OF ALCOVE

LEGEND

-Designed Working Capacity: 23,000 liters (6,076 gallons)
-Maximum Holding Capacity: Estimated to be 23,848 liters (6,300 gallons)
-Construction Interior: Type 304 stainless steel with #4 finish, 3mm thick
-Construction Exterior: Type 304 stainless steel with #2b finish, 2mm thick
-Tank Top Construction: Inverted conical cover, 15 degree slope
-Tank Bottom Construction: Flat bottom sloped to complete drain side outlet
-Insulation: Polyurethane, 50 mm (2 inches) thick
-Dimension: Outside diameter does not exceed 2.3 meters (90.55")
-Overall height 7.18 meters (282.9")
-Heat Transfer Surface: ? square meters (? square feet) of stainless steel dimple plate heat transfer in complete vertical side wall and bottom side wall split into (2) separate sections. Upper half and lower half
-Agitation: Side entering agitator, approximately 1.5kw (2 HP) 3 Blade agitator approximately 560mm (22") Diameter
-Agitator Motor: 3 phase, 60 hertz, 230/460 volts, 42 / 21 rpm.
-Manway Door: Side entering, oval manway door 436 mm (17.0") high
-C. I. P. Device: Top mounted, (Removable), spray balls for CIP removable from top exterior
-Inlet Connection: 2.0 inch sanitary clamp connection
-Outlet Connection: 2.5 inch sanitary clamp connection
-Alcove: Stainless steel alcove (shipped loose; not mounted on tanks) alcove to be 23" deep to accommodate 1" overlap of alcove stub, field welded 2" alcove stub welded to tank. Radius required at weld. Buff all welds smooth on interior area of alcove
-Vent Line: Stainless steel vent line, 3 inch, from top connection to connection in alcove (shipped loose; not mounted on tanks) holes in alcove for vent line to be field cut
-C.I.P. Line: Stainless steel C.I.P. line, 2 inch, from top connection to connection in alcove (shipped loose; not mounted on tanks) holes in alcove for cip line to be field cut
-Tank Door Gaskets: (Two) Spare tanks door gaskets
-Thermometer: Dial indicating thermometer in Celsius & Fahrenheit measure
-Recording Thermometer Shell: To be installed by manufacturer, shell to be supplied by SAVERY USA
-level Senser Shell: to be installed by manufacturer, shell to be supplied by SAVERY USA

CUSTOMER APPROVAL:				
REVISIONS :	BY:	no.	DATE:	DESCRIPTION:

SAVERY U.S.A.

PREPARED BY
P.O. BOX 22771
Lake Buena Vista
Florida 32830 USA
TEL. (407) 876-2789
FAX. (407) 876-9828
E-Mail: sales@saveryusa.com
Web Site: www.saveryusa.com

CLIENT
SHOW SILO

SCHEME C
6,076 Gal./23,000 Ltr.
Stainless Steel
Processing Silo Tank

SHEET NO:	DEPARTMENT:	DRAWING NO:
1 OF 1	ENGINEERING	SHOW SILO
07/02/07	REMARKS:	REVISION NO:
DATE: 10/27/11	SCALE: BAR SCALE	DRAWN BY: E. BALL