ELF 400

Small, practical, fast, efficient, accurate

Features

- Volumetric depositing
- 4 product cylinder sizes available to meet your portion requirements
- 6 US gallon (22 liter) conical hopper
- Available as a package or configured to order
- Includes spare parts kit and quick start guide

UNIFILLER

WE CREATE **THE EASY WAY**

This Entry Level Filler, the ELF 400 is designed as a little work horse! The ELF 400 will ensure you get precise portion control quickly, and can be completely disassembled for cleaning in seconds.

The ELF 400 is always there when you need it, it never complains, gets tired or takes days off!

Key Benefits

- Very small footprint, fits conveniently on any table or counter
- Speed and portion accuracy
- Solid stainless steel construction throughout
- Rugged, durable design
- Full wash down, all food contact parts dishwasher safe
- Tool free, quick cleaning and change-over design
- Deposit range 0.25 oz (7 ml) to 14 oz (420 ml)

System Includes

- Hopper 6 US gallon (22 Liter)
- Product cylinder 3” (up to 14 oz)
- Spout nozzle
- Foot pedal

WATCH BAKERY VIDEO

WATCH FOOD VIDEO

ELF 400

UNIFILLER

Revision: 2017/05/15

Package Name, Intended Use		Includes	
ELF Basic Spout Nozzle - Depositing cake batter into pans - Portion larger deposits		Hopper 6 US gallon (22 Liter) Product cylinder 3” (up to 14 oz) Spout nozzle Foot pedal	
ELF Handheld Nozzle - Depositing muffin batter, bakery fillings and fruit fillings - Decorating with buttercream and whipped creams - Portioning liquids into bottles and cups		Hopper 6 US gallon (22 Liter) Product cylinder 2.5” (up to 9 oz) Handheld nozzle	
ELF Injection Nozzle - Injecting donuts - Injecting cream puffs and eclairs		Hopper 6 US gallon (22 Liter) Product cylinder 1.5” (up to 3 oz) Dual injection with two ¼” diameter nozzles at 4” centers Foot pedal	
ELF Deluxe - Does all of the above		Hopper 6 US gallon (22 Liter) Product cylinder 3”, 1.5” Handheld nozzle Spout nozzle Dual injection nozzle Foot pedal	

Product Cylinder Size	Deposit Volume (fl oz)			
	Min (15%)		Max	
3”	2.7 oz	(80 ml)	14 oz	(420 ml)
2.5”	1.8 oz	(53 ml)	9 oz	(280 ml)
1.5”	0.6 oz	(18 ml)	3 oz	(100 ml)
1”	0.25 oz	(7 ml)	1.3 oz	(40 ml)

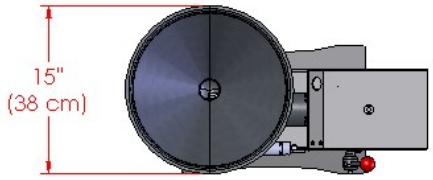

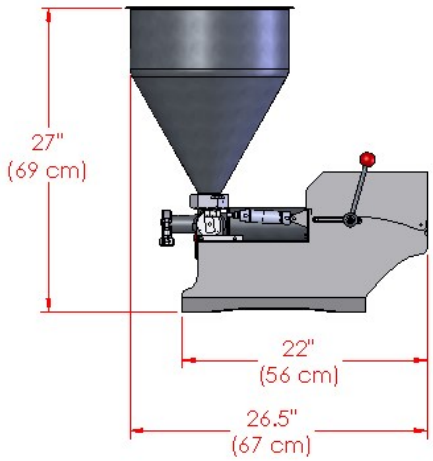

Specifications

SPEED

Up to 140 deposits/min

Based on 20% volume and product consistency.

PARTICLE SIZE

Up to ¾” cube (19 mm)

SHIPPING

L:33 x W:20 x H:30”
(85 x 50 x 76 cm)

Machine Weight:
40 lbs (18 kg)

Shipping Weight:
66 lbs (30 kg)

POWER

Air:

3 CFM @ 80 psi
(85 L/min @ 5.5 bar)
Can be used with a small 1 hp air compressor

Note: Equipment quoted is designed to run at the quoted speed and is dependent on operator efficiency, skill, deposit size and product consistency.

Unifiller North America & Int.
Head Office Canada
(604) 940-2233
info@unifiller.com
www.unifiller.com

Unifiller Systems UK Ltd.
United Kingdom
01933 676005
customeruk@unifiller.com
www.unifiller.com

Unifiller Asia Pacific
Australia
+61 408 243 553
wilhelmh@unifiller.com
www.unifiller.com

Unifiller Europe GmbH
Germany
+4976215836310
info@unifiller-europe.com
www.unifiller-europe.com

ELF 400

PRODUCT CONFIGURATOR

UNIFILLER

Item	Select	Notes
Base Machine		
Standard		
Hopper		
Conical 6 US Gallon		
Cylindrical 6 US Gallon with follower plate		
Product Cylinder Kits (Hot kit for product temperatures of 140—180 dg F(60-82 dg C)		
1”		
1.5”		
2.5”		
3”		
1.5” Hot		
2.5” Hot		
3” Hot		
Safe-T-Valve		
Standard		
Hot		

Item	Select	Notes
Attachments – Handheld Nozzles		
Hand Held Nozzle 1”		
Hand Held Nozzle 1.5”		
Hand Held Nozzle 1.5” Rotary Cutoff		
Attachments – Fixed Nozzles		
Drip Free Nozzle 1”		
Spot Depositor Kit		
Rotary Cut-Off Nozzle		
Nozzle Extension		
Twin Injection Nozzle ¼ Short		
Twin Injection Nozzle ¼ Long		
Twin Injection Nozzle ⅜ Short		
Twin Injection Nozzle ⅜ Long		
Attachments - Other		
Accessories		
Foot Pedal		
Hopper Stopper		
Preventative Maintenance Kit		