4000 Gallon Vertical Tank

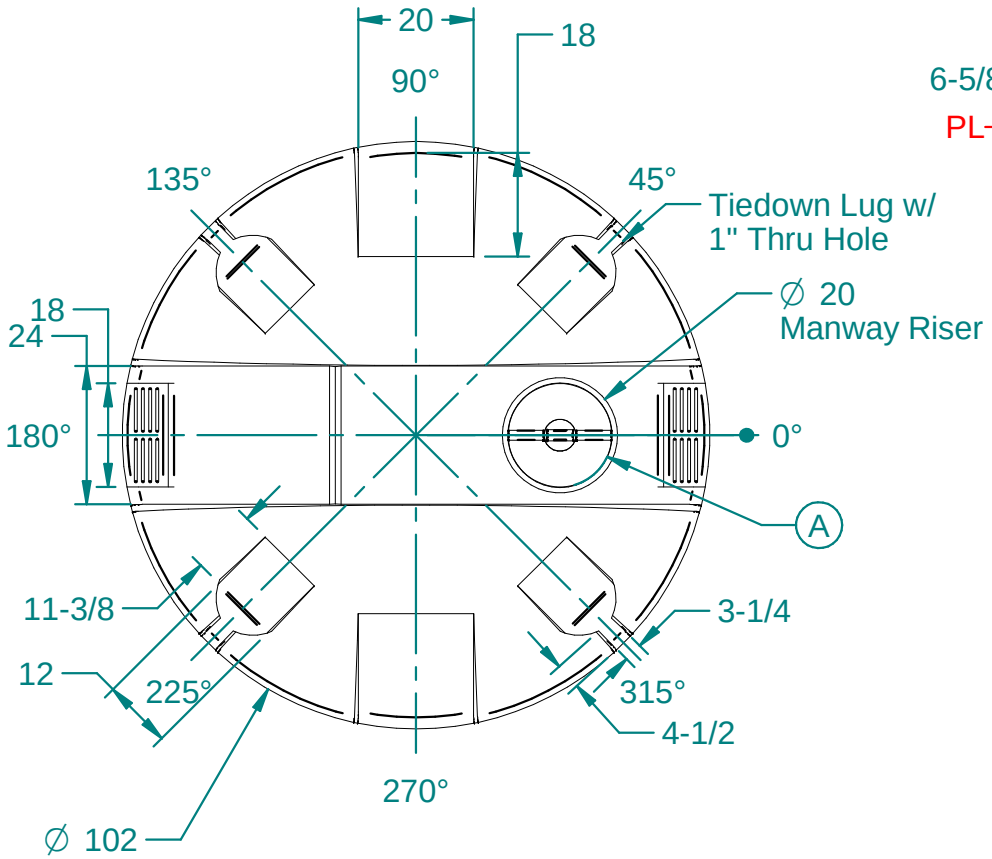

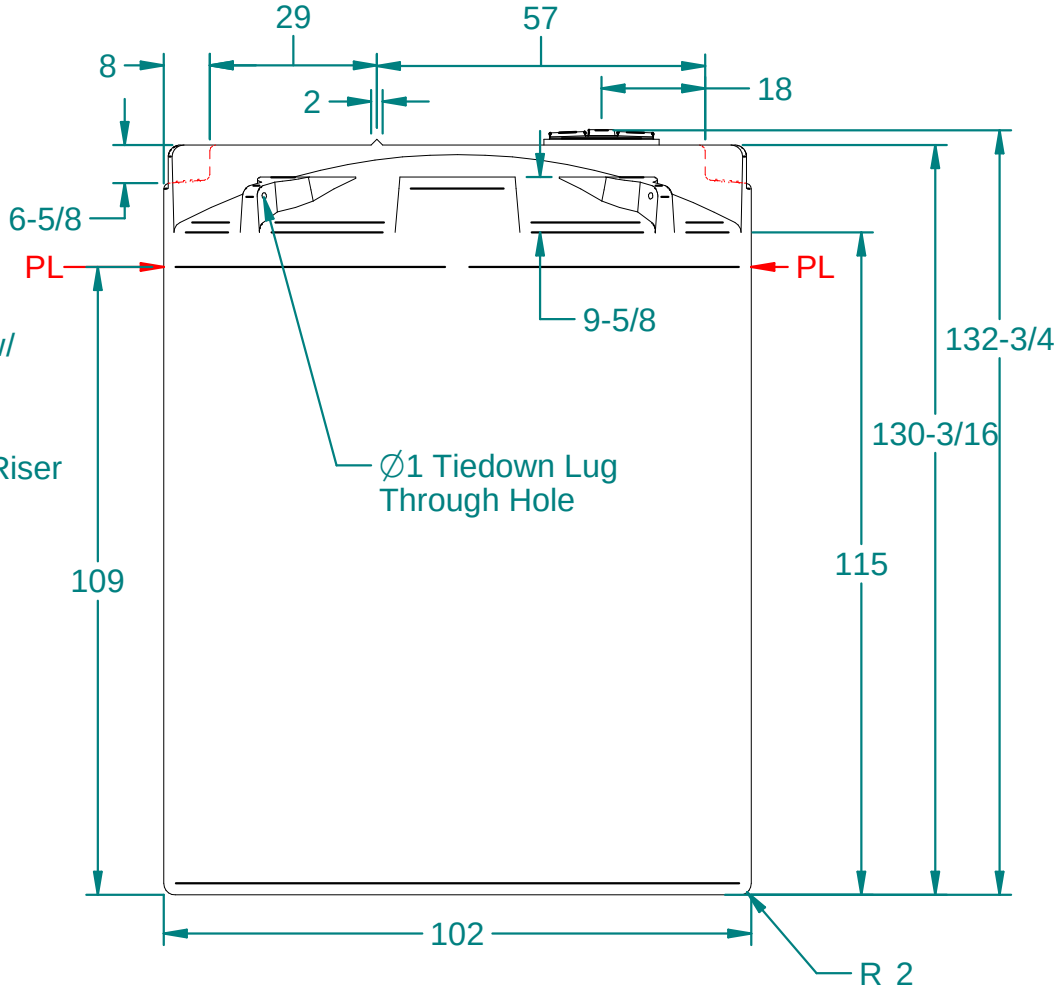

A. 18" HDPE Threaded - Vented Manway W/ 16" Access, Black, W/ SS Screws (P/N 751016)

Tank fittings to be installed at time of shipment as per Dura-Cast procedures

Weight: Dependent on specific gravity rating		NAME	DATE
Wall Thickness: Dependent on specific gravity rating	Drawn By:	SArant	1/22/2013
Customer Part No: N/A	Customer APPR		
Print Date: 4/2/2013	Copyright@2012 Dura-Cast Products, Inc.		
Comments: - UNLESS OTHERWISE SPECIFIED DIMENSIONS ARE IN INCHES - Std Radii 3/16"	UNLESS OTHERWISE SPECIFIED TOLERANCES ARE DIMS > 10" ±1% DIMS < 10" ±0.100 WALL THICKNESS ± 20% FLATNESS ± .030 in/in		

Dura-Cast Products Inc. Rotomolding Plastic for the Future
16160 Hwy 27 Lake Wales, FL. 33859

Customer:	Dura-Cast Products, Inc.		
PartTitle:	4000 Gallon Vertical Tank		
File Name:	904000 4000 Gallon Vertical Tank.dft		
Size: A	Material: HDPE 942		Rev:
Part No: 904000-A0200XXI	Do Not Scale	Sheet: 1 OF 1	