DIAGRAPH PA/5000 LT
OPERATIONS MANUAL
6160-437
Revision E

Information contained in this manual is commercially confidential and may not be reproduced or disclosed without the written permission of Diagraph. The supply of this manual or the equipment to which it applies does not constitute or imply the transfer of any rights to any party.

The information contained in this manual is correct and accurate at the time of its publication. Diagraph reserves the right to change or alter any information or technical specifications at any time and without notice.

© 2006 Illinois Tool Works Inc. All rights reserved.

Printed in the United States of America

Safety **1**

Section 1: Product Features **3**
1.1 System 3
1.2 Chassis 3
1.3 Media-Handling 3
1.4 User Interface 4
1.5 Specifications 4
General Specifications 4

Section 2: Components **5**
2.1 System Components 5
2.2 Print Engines 9
2.3 Options 10

Section 3: Installation **11**
3.1 Overview 11
3.2 Assembling the Stand 12
3.3 Connecting the Remote Handheld Unit and Bracket 13
3.4 Mounting the Chassis to the Stand 14
3.5 Mounting the Air Filter Assembly to the Stand 15
3.6 Attaching the Tamp Assembly 16
3.7 Cabling the System 18
3.8 Mounting the Warning Tower 21
3.9 Mounting the Photosensor 22
3.10 Air and Vacuum Connections 23
3.11 Loading the Label Roll 24
3.12 Loading the Ribbon 25
3.13 Minimum and Maximum Distances for the PA/5000 LT 25

Section 4: Configuration **27**
4.1 PA/5000 LT Configuration 27
4.2 Function Key Assignments 28
4.3 System Setup Menu 29
4.4 Job Setup Menu 35
4.5 Diagnostics 40
4.6 Information / Status Functions 47
4.7 Label Menu 49

Section 5: Mechanical Adjustments **50**
5.1 Pneumatic Adjustments 50
5.2 Adjusting the Tamp Applicator 51
5.3 Setting the Delay (Label Offset) 53

Section 6: Label Format Storage **54**
6.1 Capturing a Label Format 54
6.2 Loading a Label Format to the Print Engine 54
6.3 Changing Text Design in Print-Engine Resident Fonts 55
6.4 Deleting Stored Label Formats 55

Section 7: Discrete I/O 56
7.1 Functional Description 56
7.2 PA/5000 LT Discrete Board Electrical Specifications 56
7.3 Discrete I/O Configuration 57
7.4 Output and Input Events 58
7.5 The Discrete I/O Interface Connection 61
7.6 Wiring Diagram Examples 62

Section 8: Print Engine Programming and Support 64
8.1 Software 64
8.2 Internet Addresses 64

Section 9: Maintenance 65
9.1 Daily Maintenance 65
9.2 Weekly Maintenance 65
9.3 Monthly Maintenance 65
9.4 Six Month Maintenance 66

Section 10: Troubleshooting 67
10.1 Diagnostics 67
10.2 Power Problems 68
10.3 Printing Problems 69
10.4 Tamping Problems 73
10.5 Label Feed Problems 81
10.6 Handheld Error and Warning Messages 81

Section 11: Service Parts & Kits 83
11.1 PA/5000LT Controller 85
11.2 PA/5000LT Chassis Assembly 85
11.3 PA/5000LT Baseplate Assembly 86

Safety

Following is a list of safety symbols and their meanings, which are found throughout this manual. Pay attention to these symbols where they appear in the manual.

Caution or Warning! Denotes possible personal injury and/or damage to the equipment.

Caution or Warning! Denotes possible personal injury and/or equipment damage due to electrical hazard.

NOTE: (Will be followed by a brief comment or explanation.)

CAUTION: Turn off the equipment's main power before:

- Performing preventive maintenance.
- Performing any repairs to the unit.
- Servicing the equipment in any manner.

ESD (Electro-Static Discharge) protection should be worn when servicing internal printed circuit boards.

After service to the equipment is completed, replace all protective devices such as grounding cables and covers before operating the equipment.

NOTE: It is important to refer to your supervisor for complete instructions on personal protective equipment (PPE) required to work safety with this system.

PRODUCT COMPLIANCE DISCLAIMER NOTE:

This product meets the requirements of CAN/CSA-22.2 NO.60950-00 *UL 60950 using Diagraph an ITW Company approved items. Units are only tested and qualified with Diagraph an ITW Company approved parts and accessories. Use of other parts or accessories may introduce potential risks for which Diagraph an ITW Company can assume no liability.

Section 1: Product Features

1.1 System

The PA/5000 LT is a print and apply system designed for high-speed, high-volume industrial applications that include primary product labeling, UPC bar coding, pharmaceutical and electronics packaging. It is a next-label-out system that provides true on-demand, variable data labeling.

The PA/5000 LT is flexible and can address a variety of design and custom application requirements:

- Large label formats
- High-speed demand labeling
- Popular bar codes
- High-quality fonts and graphics
- Simplified PLC integration
- Machine to machine networking
- Label format storage
- Reprint last label printed
- Advanced diagnostics
- On-line Help

With a full-range of options, the PA/5000 LT can apply labels with great accuracy at high conveyor speeds and can function as a dual-panel wrap-around applicator.

1.2 Chassis

The PA/5000 LT chassis is a robust, yoke-mounted design of aluminum and steel for print-engines running high-speed operations.

- Swivels to conform to common application orientations - top down, side panel and bottom up - and then locks in place.
- Accommodates different sizes of tamp cylinders for variable distance and variable label-size applications.
- Provides easy access to configuration controls - switches, pneumatic controls, potentiometers and sensor adjustments.

1.3 Media-Handling

The print engine location allows for easy media-loading and ribbon-changing.

- Accepts a wide range of papers, films and synthetic label materials.
- Rewinds label media with air-motor technology.
- Employs sensors to monitor media status-label low, broken liner, early label out and label present.
- Provides quick-change label supply and rewind hubs for minimum downtime.

Media Web Monitoring - both ribbon and labels are monitored in use for low or out conditions, missing labels, and broken web.

1.4 User Interface

The user interface on the Remote Handheld Unit is menu-driven for easy setup and operation. It contains advanced diagnostics for fast and accurate troubleshooting. The controller electronics are isolated from production line impact, vibration, ESD, RFI and EMI.

1.5 Specifications

General Specifications

Input Devices	Remote Handheld Unit and PC
Communications	Serial, EIA232 / EIA485 / EIA422 PC to MCA (1200 to 9600 Baud) MCA to Print Engine (1200 to 57,600)
Software (recommended)	EasyLabel®
Applicator	Tamp with auto-retract available in 12" and 18" cylinder lengths
Air	80 PSI minimum, 3 cfm, 125 PSI maximum
Electrical	100-140 VAC, 60 Hz, 3A; 200-240 VAC, 50 Hz, 1.5A
Dimensions	37" W x 25" H x 25" D without stand
Weight	220 lb (100 kg) Includes print engine, applicator assembly, and stand. 130 lb (59 kg) without stand.
Environmental Requirements	41° F - 100° F (5° C - 37° C); 20 - 85% RH non-condensing
Certifications and Compliance	ETL Listed, Conforms to UL STD. 1950, CAN/CSA C22.2 NO 950

Section 2: Components

2.1 System Components

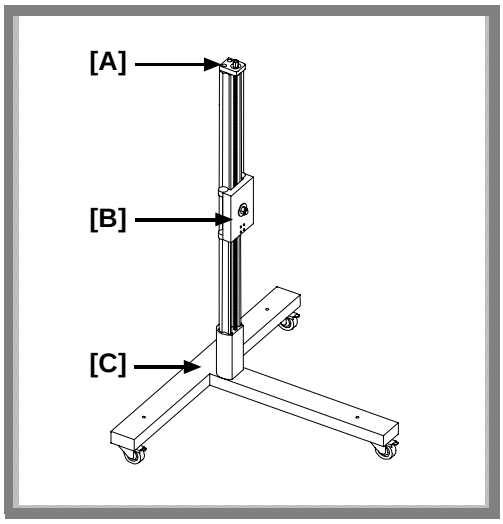

Floor Stand Assembly 6160-325

This assembly includes a T- base with casters **[C]**; an upright post with a height-adjustable mounting plate **[B]**; and a ¾ inch hex adapter for adjusting the height **[A]**.

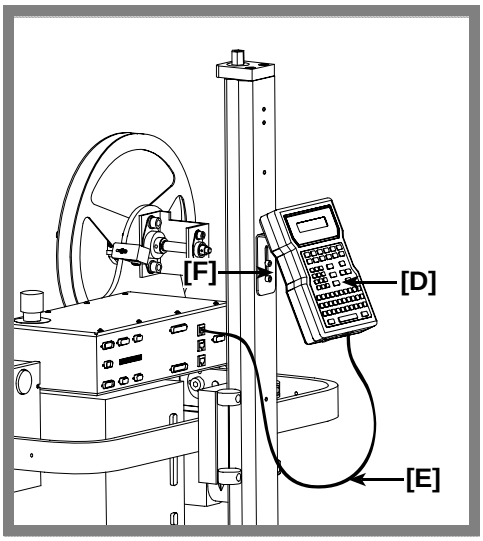

Remote Handheld Unit 6160-400

This assembly includes a removable handheld terminal **[D]** and holder **[F]**.

The face of the Handheld has a QWERTY-style keypad and LCD for application setup and diagnostic tests. The handheld terminal cable **[E]** connects directly to the back of the PA/5000 LT controller at A4A2J11 for power and communications.

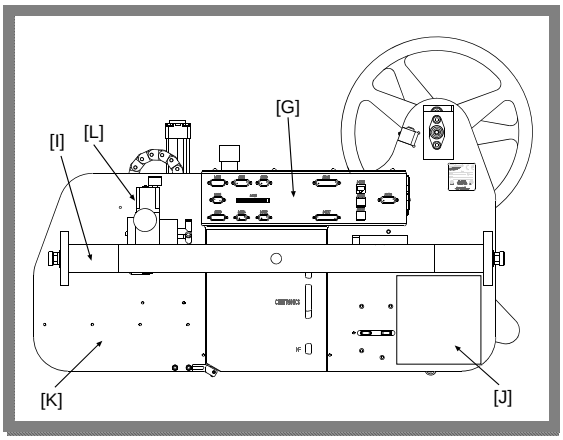

Chassis Assembly - Rear View

This assembly provides the baseplate **[K]** for the print engine and the mechanical components of application. The view at left shows the back side of the chassis which has the pneumatic control module (PCM) **[L]**, the PA/5000 LT main controller assembly (MCA) **[G]**, the rewind motor **[J]**, and the mounting yoke **[I]**.

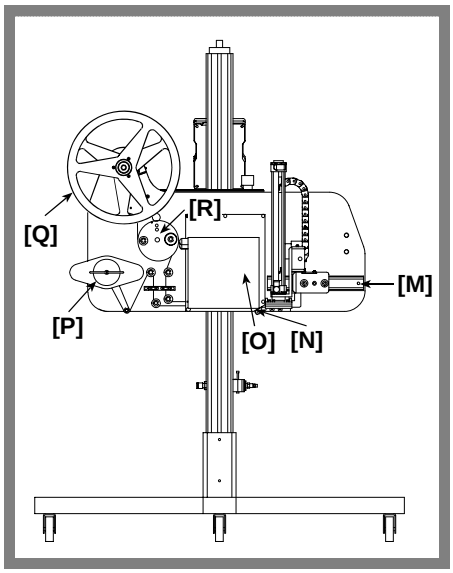

Chassis Assembly - Front View

The front view of the chassis shows the label supply disk **[Q]**, the dancer assembly **[R]**, the print engine **[O]**, the air assist tube **[N]**; the rewind assembly **[P]** and the dovetail bracket **[M]** for mounting the air cylinder/tamp assembly.

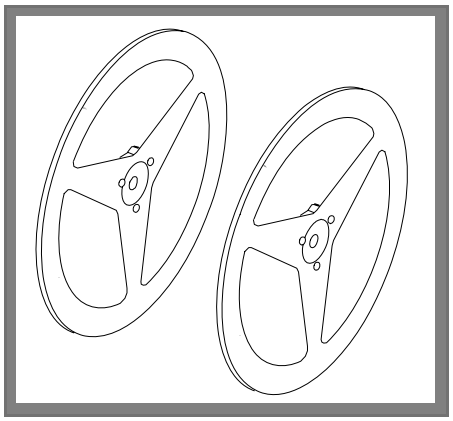

Guide Disks

Each PA/5000 LT comes with an inner supply disk and an outer supply disk to hold and guide rolls of labels.

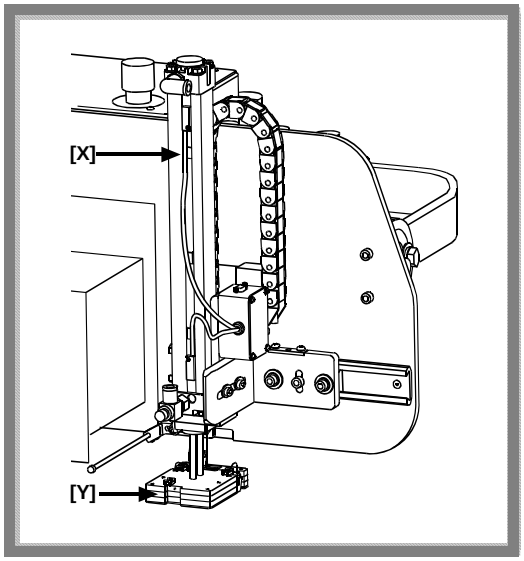

Tamp Applicator/Tamp Pad Assembly

The PA/5000 LT has two sizes of tamp applicator assemblies **[X]**:

12 inch Tamp Applicator Assy (6150-201X12)

18 inch Tamp Applicator Assy (6150-201X18)

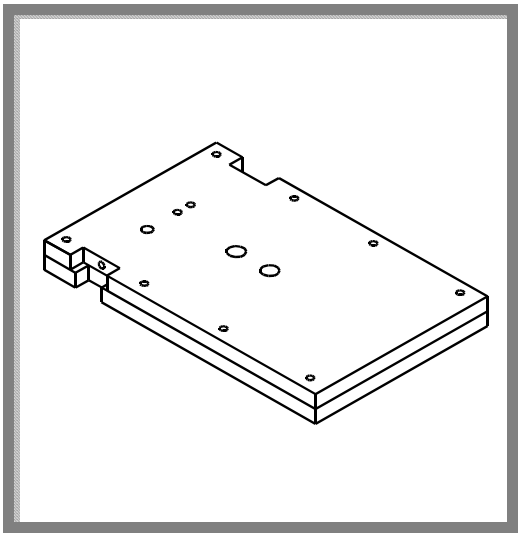

Tamp Pads

Tamp pads (at left and **[Y]** in figure above) are available in a wide range of sizes. The available range runs from 4" x 2" up to 7" x 13" with ¼" increments along the way. As shown below, the part numbering system for these plates includes the size of the plate in the number and an optional soft tamp pad indicator:

6150-223-XXX YYYY S

- **S** — **Soft tamp pad**
- **YYYY** — **Label length with two decimal places**
- **XXX** — **Label width with two decimal places**

For example, the part number for a four-inch wide by two-inch long label is 6150-223-4000200. Adding an "S" to the end of the part number specifies the soft tamp pad option.

Call Diagraph (800-526-2531) for pricing and availability.

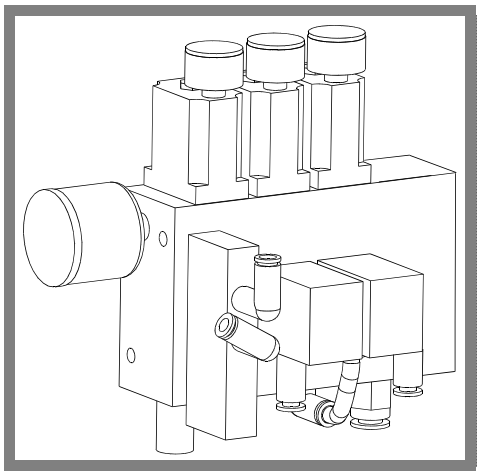

Pneumatic Control Module 6160-201

This module has four pressure gauges to monitor air pressure, and individual regulators to adjust pressure.

These gauges monitor Vacuum, Tamp, Air Assist, and Incoming Air Pressure.

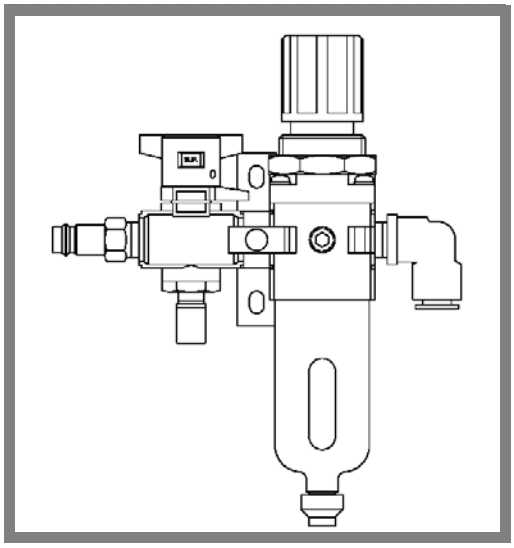

Filter System Assembly 6160-423

This filter assembly includes a 5-micron element in a metal bowl with a liquid level indicator and automatic drain. The drain discharges whenever the air pressure to the system is shut off.

NOTE: This filter assembly removes liquids and solid particles from compressed air - water vapor passes through and can condense into liquid as the air temperature drops. An air dryer should be installed in the compressed air supply system if water condensation is present.

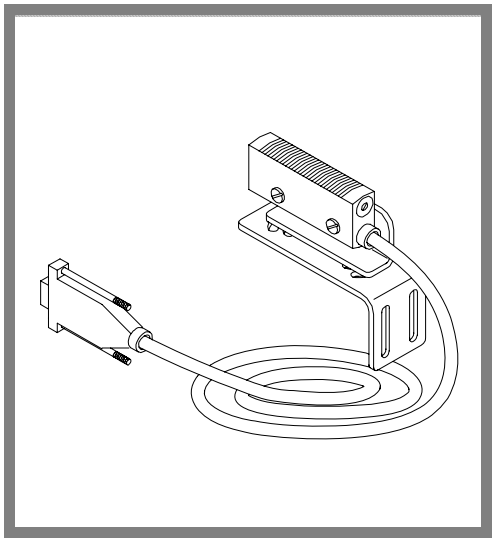

Photosensor Assembly 5700-216

This assembly includes a diffuse-type self-contained photosensor with a ten foot cable and multi-position bracket mounts. It functions as a switch to start the application cycle when it detects the presence of a product on the conveyor.

Rewind Assembly

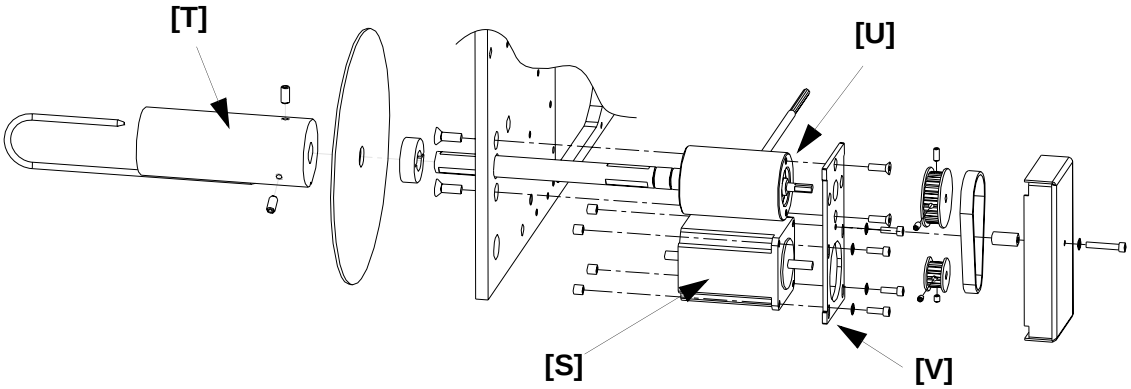

This assembly includes a DC Stepper Motor [S] that belt drives the Rewind Hub [T]. The Rewind Bearing Housing [U] connects the Motor Mounting Plate [V] to the motor and base-plate.

2.2 Print Engines

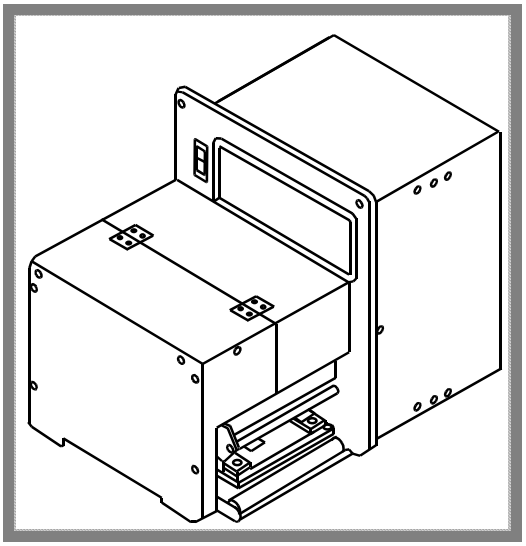

The PA/5000 LT has been designed to work with many different models of thermal transfer/direct thermal print engines.

Narrow Web Print Engine

A typical print engine supplied with the PA/5000 LT will print 203 or 300 dpi on media ranging from 1 inch x .25 inches (25.4 mm x 6 mm) to 5 inches by 13 inches (127 mm x 330 mm). It has multiple fonts and can print most of the popular bar codes.

Wide Web Print Engine

A typical wide web print engine will have the same performance characteristics as its narrow web relative but with larger media-handling capabilities. A wide-web printer for the PA/5000 LT will print labels sized up to 7 inches x 13 inches (178 mm x 330 mm).

2.3 Options

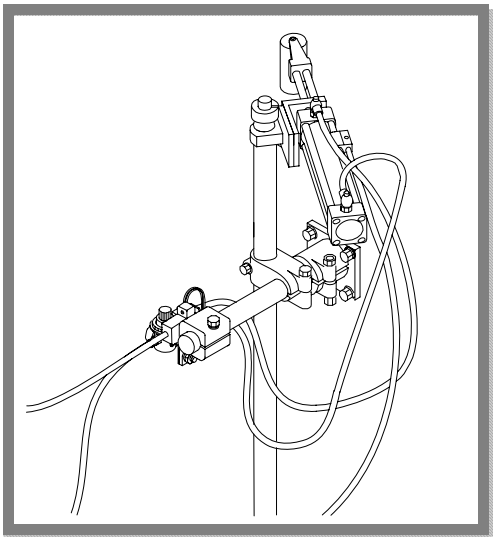

Secondary Wipedown Assembly 6105-103

A wipedown unit is used when applying labels onto two adjacent panels of a carton. The primary applicator applies part of the label onto one surface and the secondary wipedown pushes the unattached portion onto the second surface.

For this unit, the PA/5000 LT supplies both electric (24 VDC) and air (0-100 PSI) power. The assembly includes bracketry, a tee fitting, an interconnect cable and a photosensor that acts as the signal source to initiate the cylinder stroke. This assembly also includes the Secondary Wipe-Down Assembly User's Manual (5802-930) which contains complete installation and operation instructions.

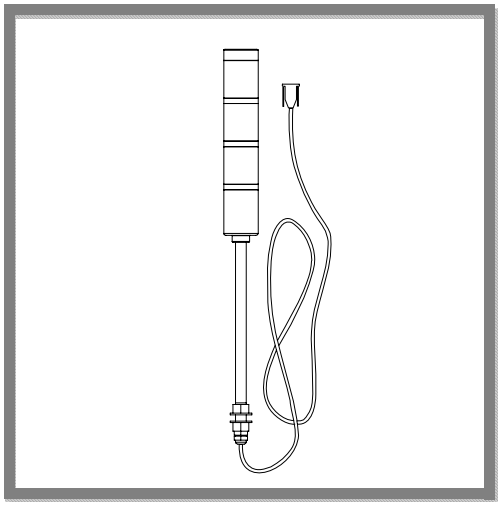

Warning Tower Kit 6150-828

The warning tower assembly provides visual feedback when error conditions occur. This assembly includes the tower, the mounting hardware and a signal cable.

Section 3: Installation

3.1 Overview

Instructions in this section show the PA/5000 LT in a top down configuration, that is with the print engine upright and labels applied on top of the product. See Section “3.13 Minimum and Maximum Distances for the PA/5000 LT” for other configurations.

Review “Safety” for power and air requirements.

Tools

Installation and configuration of the PA/5000 LT requires the tools listed below:

- Set of sockets or box wrenches: must contain a 1-1/8 inch wrench
- Utility knife
- Sets of Allen wrenches, U.S. and metric
- Phillips #1 screwdriver
- Phillips #2 screwdriver
- Small slotted tip screwdriver
- Medium slotted tip screwdriver
- Diagonal cutters
- 9/16 inch box wrench
- 15/16 inch open-end wrench (optional)
- 10mm open-end wrench

The size of the PA/5000 LT necessitates two people for installation.

3.2 Assembling the Stand

Parts:

(1) T-Base

(1) Upright-post holder with setscrews

(1) Upright post

(4) Bolt and 1-1/8" Nut for attaching post to T-Base

Assembly:

1. Lock casters **[C]** to prevent the stand from rolling during assembly.
2. Connect the upright-post holder **[B]** to of the T-base **[D]** with the bolt and 1-1/8" nut **[E]**.
3. Position the upright post **[A]** on the tee base and tighten the setscrews **[F]**.

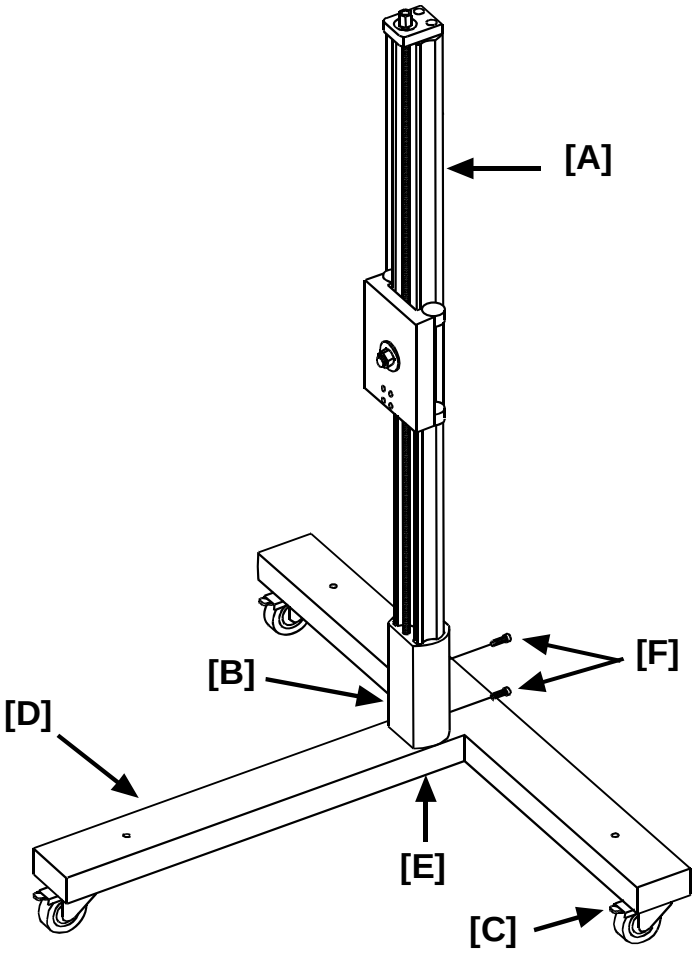

CAUTION: To comply with safety requirements of CAN/CSA-22.2 NO. 60950-00 *UL60950, the stand must be bolted to the floor during operation to avoid a tip-over hazard.

3.3 Connecting the Remote Handheld Unit and Bracket

Parts:

(1) Remote Handheld Unit

(1) Tilt Bracket

(1) Mounting Bracket for Handheld Keypad

(1) 1/4-20 X 7/8 inch Socket Head Cap Screw

(2) 1/4-20 x 3/4 inch Stainless Steel Socket Head Cap Screw

(1) 1/4-20 inch Stainless Steel Jam Nut

Assembly:

1. Using the two 1/4-20 x 3/4-inch cap screws, attach tilt bracket **[C]** to the upright post of the stand.
2. Using the 1/4-20 X 7/8-inch cap screw and 1/4-20 inch jam nut, attach the mounting bracket **[B]** for remote handheld unit to the tilt bracket.
3. Attach the remote handheld unit **[A]** to the mounting bracket.
4. The handheld keypad cable attaches to A4A2J11 **[D]** on the MCA.

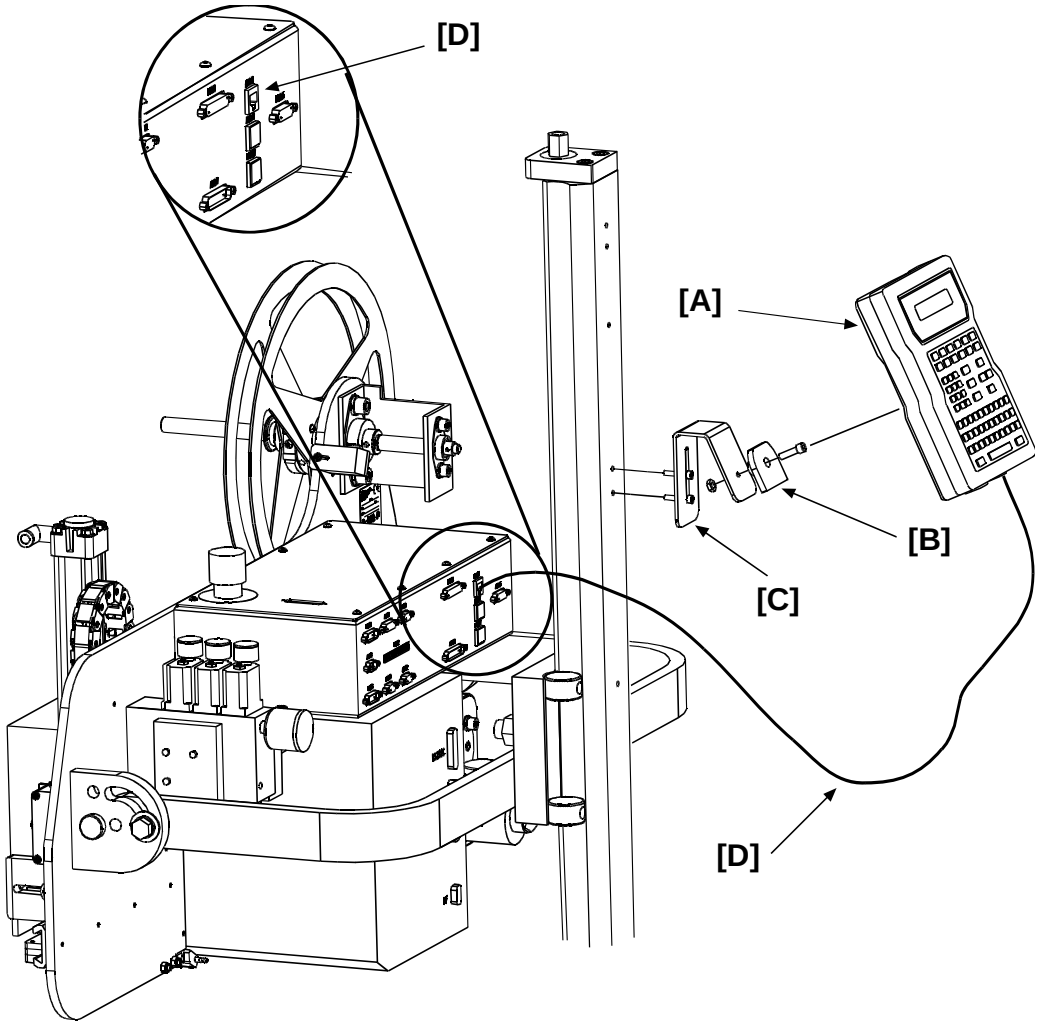

3.4 Mounting the Chassis to the Stand

NOTE: *The chassis assembly weighs over 130 pounds and will require more than one person to connect it to the stand.*

Parts:

(1) PA/5000 LT chassis/printer assembly

Assembly:

NOTE: *Exercise care when attaching the chassis to the stand. Only lift the chassis by the baseplate or yoke.*

1. Remove the nut **[E]** and washer **[F]** from the mounting plate bolt **[G]** of the stand and set aside.
2. Check the stops **[B]** of each side of the yoke assembly **[C]** to make sure that they are engaged and that the chassis will not move in the yoke before lifting the assembly from its packing.
3. Place the mounting hole on the yoke onto the mounting plate bolt **[G]**.
4. Secure the yoke **[D]** to the mounting plate bolt **[G]** using the nut **[E]** and washer **[F]** removed earlier.
5. Tighten nut **[E]** with a wrench.
6. Loosen the chassis stops **[B]** on each side of the yoke with the ¾-inch ratchet wrench and orient the machine to the top down configuration as shown in the figure to the right. This position allows easy access for cable and pneumatic connections.
7. Make sure that the chassis stops **[B]** are tight in the yoke and secure to the stand before proceeding.

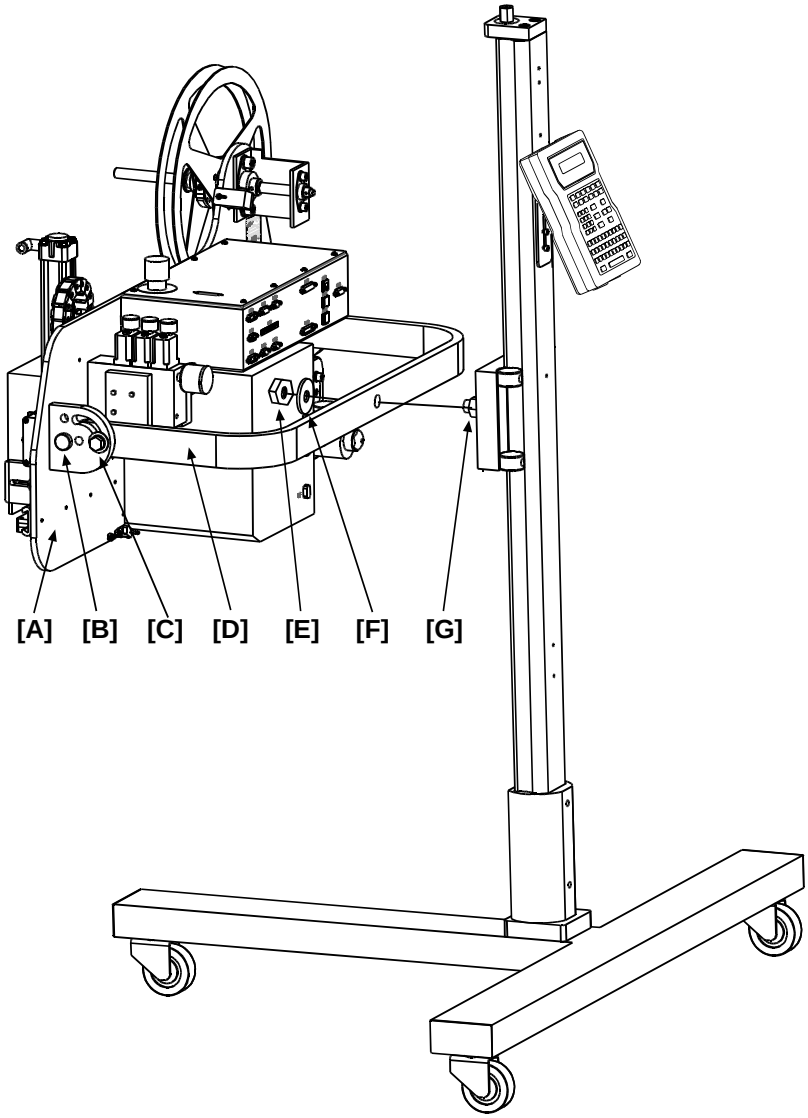

CAUTION: Only lift Chassis Assembly by the yoke **[D]** or baseplate **[A]**.

3.5 Mounting the Air Filter Assembly to the Stand

The air filter/regulator mounts to the rear of the stand. Two socket head cap screws secure the unit through the mounting holes in the center of the device. Once the unit is mounted, connect the 3/8" black pneumatic tube from the filter to the Pneumatic Control Module. Next, connect the incoming air line to the quick disconnect fitting. Rotate the red shutoff valve knob to the EXH (Exhaust) position to stop the airflow. To turn on the air, rotate the red knob to the SUP (Supply) position.

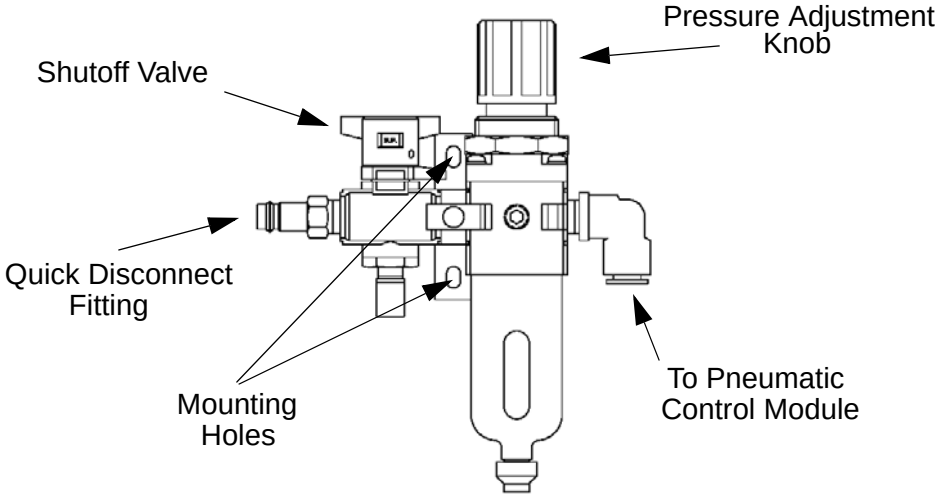

3.6 Attaching the Tamp Assembly

Parts:

(1) PA/5000 LT air cylinder and tamp assembly

(1) Air Assist Assembly

Assembly:

1. Attach the air assist assembly **[F]** to the baseplate of the chassis.
2. Loosen the center screw **[C]** in the cylinder bracket and slide the bracket onto the dove-tail guide **[E]**.

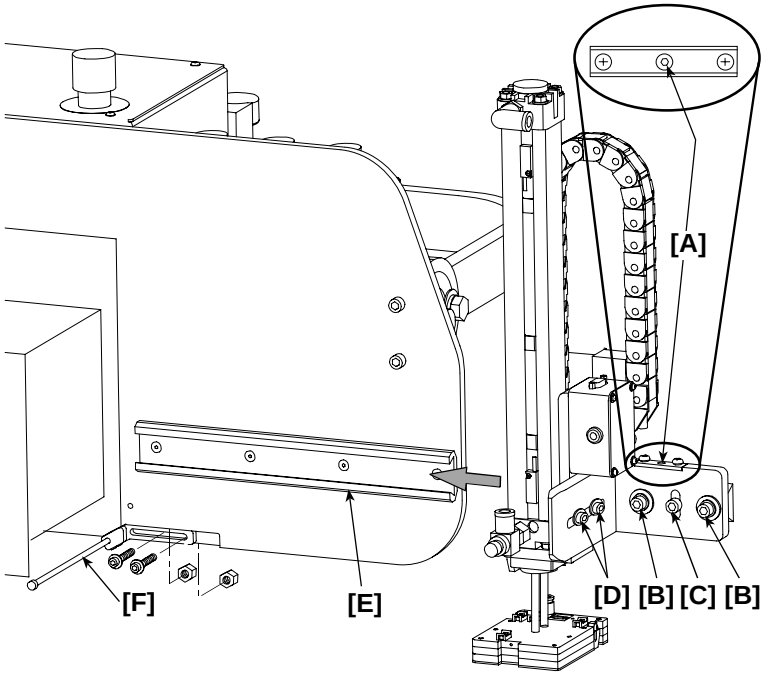

[G] – 3/16-inch
[H] – Tamp pad
[I] – Air Assist Tube
[J] – 1/16-inch
[K] – Peel Blade

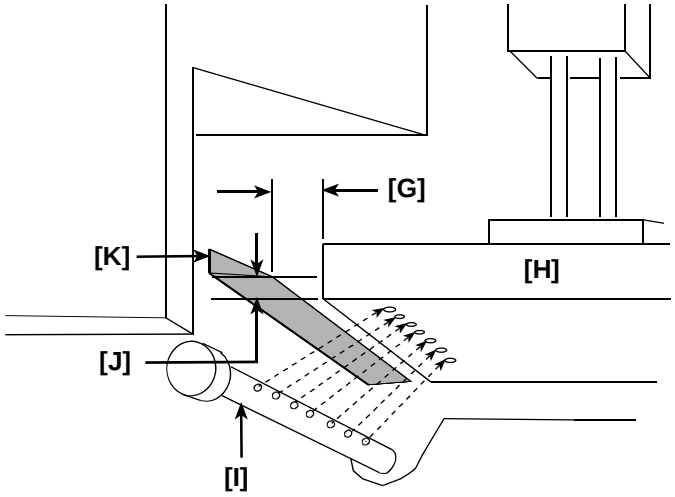

3. Position the assembly so the tamp pad rests 3/16 inch **[G]** from the peel blade **[K]** on the print engine. Before tightening the assembly into position, make sure that the tamp pad **[H]** will not hit the air assist tube **[I]** as it descends.
4. Tighten the center screw in the bracket **[C]** to lock the assembly in place.
5. Loosen the two outer screws **[B]** in the assembly bracket. Adjust the height of the assembly with the captive screw **[A]** until the tamp pad is 1/16 inch **[J]** below the peel blade **[K]**. Rotating the captive screw **[A]** clockwise lowers the assembly and counter-clockwise raises it.
6. Tighten the captive screw **[A]** in the bracket.
7. Loosen the two screws **[D]** in the cylinder bracket and adjust the tamp pad **[H]** until it is parallel to the peel blade **[K]** and centered on the label path.
8. Note the connectors for the tamp cylinder tubing, vacuum tubing, and the tamp cylinder cables:

   •Blue air tubing connects to the top of the cylinder;

   •Red air tubing connects to the bottom;

   •White vacuum tubing passes through the energy chain and will eventually connect to the vacuum filter;

   •DB15 connector attaches to the MCA at A4A1J4.

   •DB9 connector attaches to the small box on the top of the tamp assembly.
9. Carefully adjust the position of the air assist tube **[I]** in relation to the tamp pad **[H]**. As shown, the air holes in the air assist tube should be pointing at the first row of holes on the tamp pad.

   Note the critical dimensions highlighted: the tamp pad **[H]** must be separated from the peel blade **[K]** by slightly more than 3/16 inch **[G]** and below the peel blade by 1/16 inch **[J]**.

3.7 Cabling the System

Because the PA/5000 LT system supports multiple configurations, the number of cables and connections will vary with each installation. The following installation notes cover ALL cable connections. Skip any directions for connecting devices that are not included in the system.

Main Control Assembly (MCA)

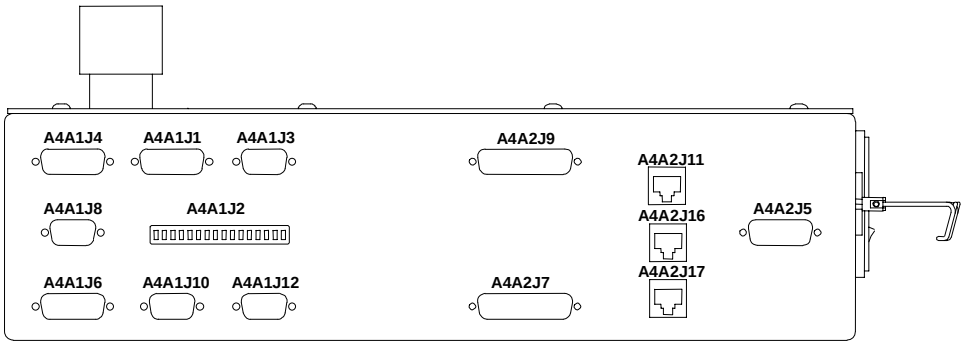

BACK

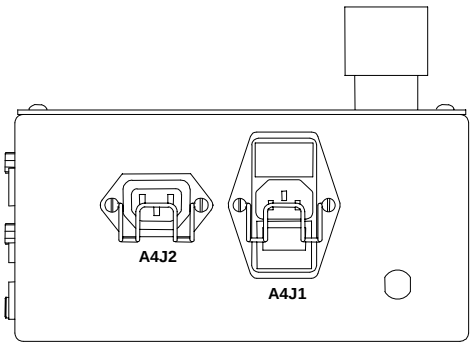

SIDE

Connection	Cable	Connection	Location	Note
A4A1P2	6160-420	A2A1J1	Applicator Assembly	Connects the MCA to the Tamp Applicator Assy.
A4A1J2	6160-548	PLC or similar input & output device	MCA	Connects a PLC or another input output device to the PA/ 5000 LT.
A4A1J3	6150-828	Warning Tower	Stand	Connects the optional warning tower to the MCA.
A4A1J4	6160-331	A3A1J1	Pneumatic Control Assembly	Connects the Pneumatic control assembly to the MCA.
A4A2J5	Note 1	I/F	Print Engine	Connects the MCA to the print engine.
A4A1J6	6160-536	Electronic Rewind	Baseplate	Connects the rewind assembly to the MCA.
A4A2J7	Note 2	RS-232 Port	Printer Engine RS-232 Connection	Connects the print engine to the MCA.
A4A1J8	6105-105	6105-103 (Secondary Wipedown)	Secondary Wipedown	Connects optional secondary wipedown to the MCA.
A4A2J9	Note 3	Personal Computer (PC) Serial Port	Personal Computer (PC) RS-232 Connection	Serial communication from PC.
A4A1J10	5700-216	Photo Sensor #1	Photocell 1 Connection	Product detection signal.
A4A1J12	5700-216	Photo Sensor #2	Photocell 2 Connection	Optional product detection signal.
A4A2J11	6160-413	Handheld Unit	Upright post on back of stand	Connects Handheld to the MCA.
A4J1	6600-369	AC Input	AC Power	Input power for PA/5000 LT.
A4J2	6160-542	AC Output	Print Engine	Output power for print engine. Connects AC power from MCA to print engine.

Cable Connections

Use the following Interconnect Diagram and make all necessary cable connections.

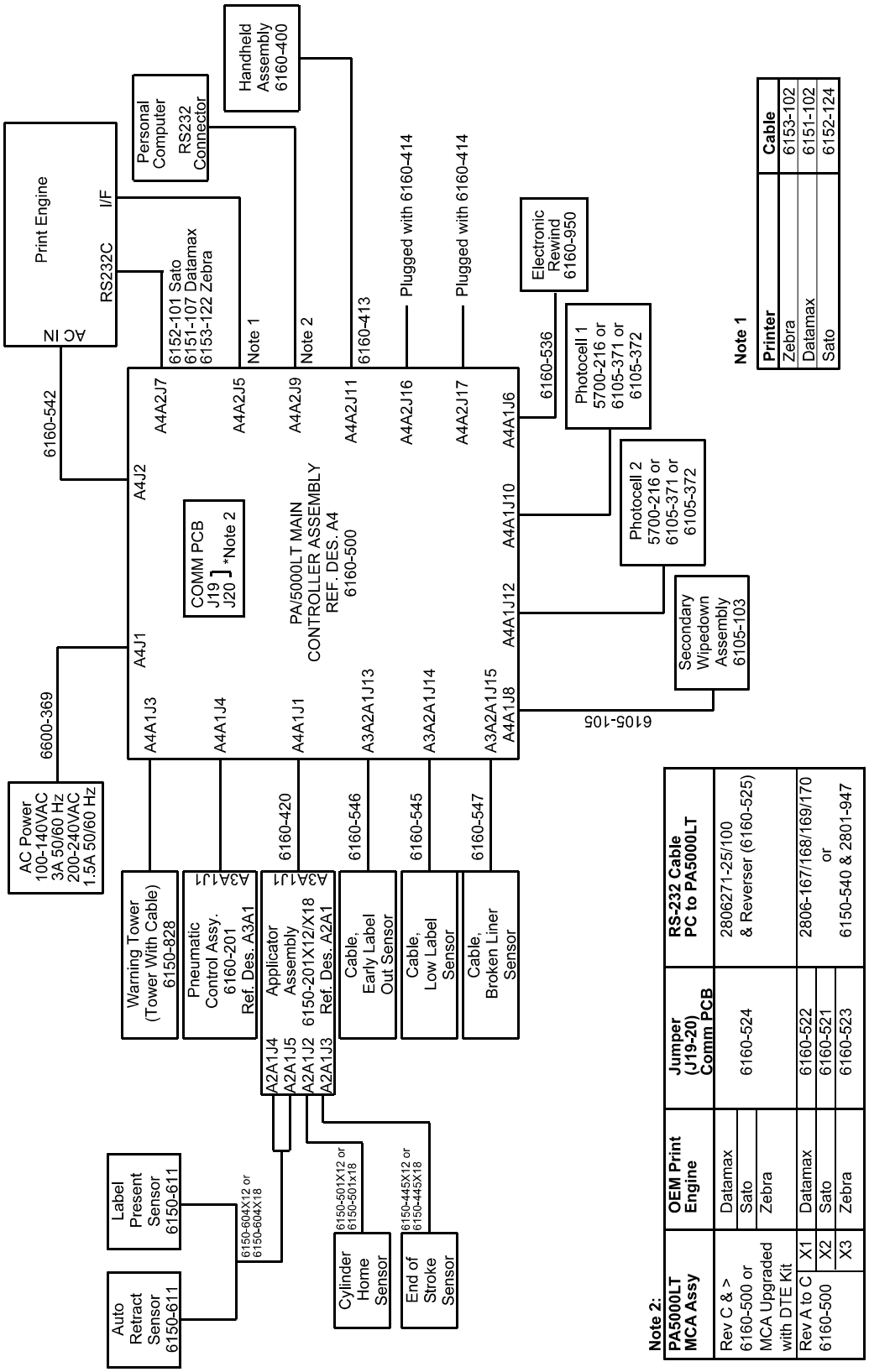

3.8 Mounting the Warning Tower

Parts:

(1) Warning tower with cable and connector (6150-828)

Assembly:

1. Attach the mounting bracket to the stand using the two socket head screws.
2. Loosen the cable grommet and the adjacent nut on the end of the warning tower. Let the grommet and nut slide down the cable.
3. Holding the tower upright, pass the cable through the end slot in the mounting bracket.
4. Push the exposed metal threads down into the mounting bracket and anchor in place with the nut on the cable.
5. Reattach the cable grommet.
6. Plug the DB9 plug into connection A4A1J3 on the MCA and hand-tighten the jack screws.

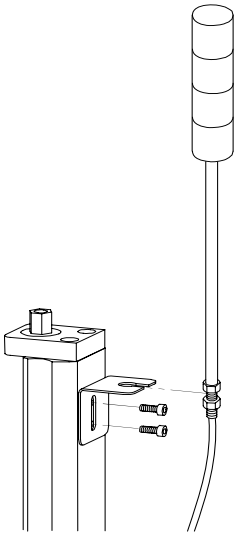

3.9 Mounting the Photosensor

The distance between the photosensor **[A]** and the PA/5000 LT's peel blade **[B]** is crucial. A good guideline is to place the photosensor as close as possible to the applicator. The maximum distance between the photosensor and the peel blade, **D1**, must be less than the minimum product spacing distance, **D2**.

Parts:

(1) Diagraph photosensor kit (5700-216)

Assembly:

CAUTION: *Make sure that the power is off before plugging in the photosensor. Plugging in the photosensor with the power ON can blow a fuse in the MCA.*

1. Mount the photosensor to the conveyor using the bracket and hardware provided.
2. Tighten screws with a Phillips screwdriver and a 5/16-inch wrench.
3. Measure the distance **D1** from the photosensor **[A]** to the peel blade **[B]** in the print engine and record this measurement on the Station Configuration sheet. This information will be needed later during the configuration of the system.
4. Make sure the power is OFF and connect the photosensor to A4A1J10 on the MCA.

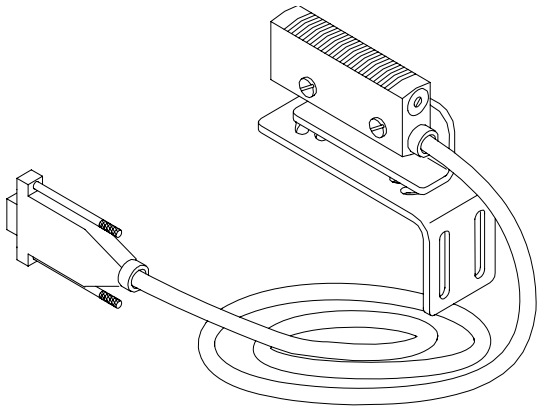

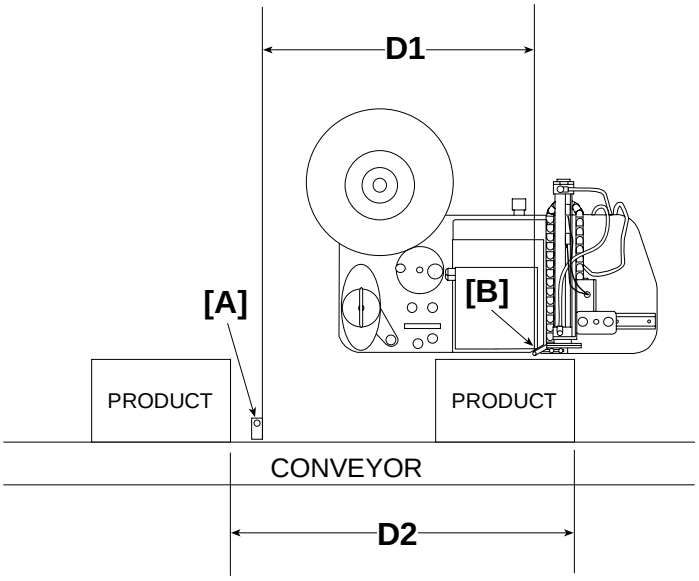

3.10 Air and Vacuum Connections

NOTE: Be sure that the air supplied by the factory to the PA/5000 LT is CLEAN and DRY (80-100 PSI, 3 CFM). Application requirements determine the exact amount of air consumption.

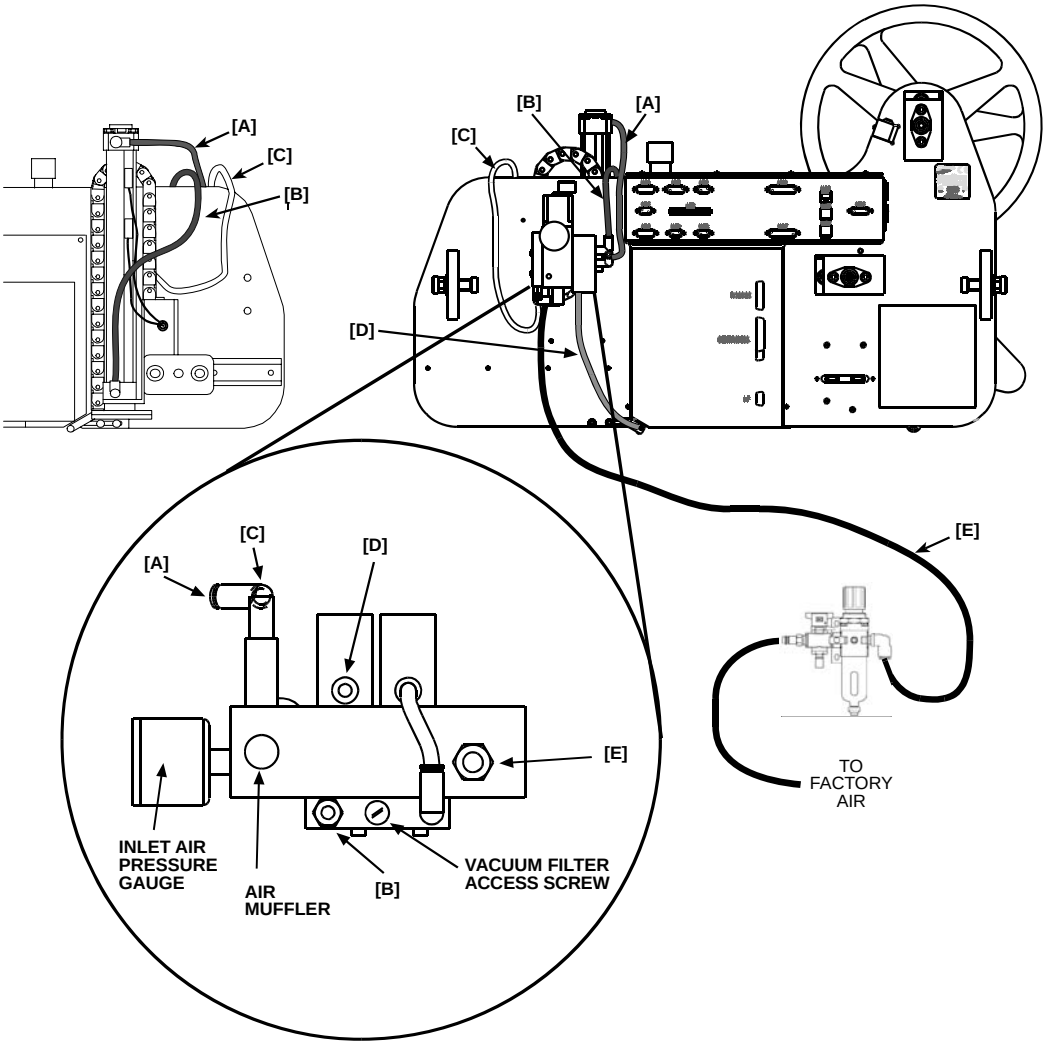

Assembly:

All tubes and connections on the PA/5000 LT are color-coded. Match the colors and use the diagram of the pneumatic control module (PCM) to connect the pneumatic lines.

[A] Blue Hose From Pneumatic Control To Top Of Tamp Cylinder (Extension)
[B] Red Hose From Pneumatic Control To Bottom Of Tamp Cylinder (Retraction)
[C] White Hose From Pneumatic Control To Tamp Assembly Chain (Vacuum)
[D] Green Hose From Pneumatic Control To Air Assist Tube
[E] Black Hose From Pneumatic Control To Air Filter Assembly

Supplying the Air

1. Connect the black air tube **[E]** from the PCM to the air output of the filter assembly.
2. Connect the factory air supply to the air filter assembly input.
3. Turn ON the air by rotating the shut-off valve to the SUP (Supply) position.

3.11 Loading the Label Roll

1. Remove the outer supply disk **[A]** and set aside.
2. Remove the wire clip **[K]** from the take-up spool.
3. Open the print engine cover.
4. On the print engine, release the printhead, the edge sensor and the pinch roller.
5. Unpack a roll of labels and remove enough labels to leave approximately two feet of exposed label liner.
6. Load the label roll onto the supply spindle so that the labels spool off from the top. Push the label roll flush against the inner supply disk making sure that the label core seats firmly on the guide collar.
7. Be sure to support the label roll with one hand while sliding on the outer guide disk with the other hand.

FOLLOW THE INSTRUCTIONS IN THE CHART BELOW.

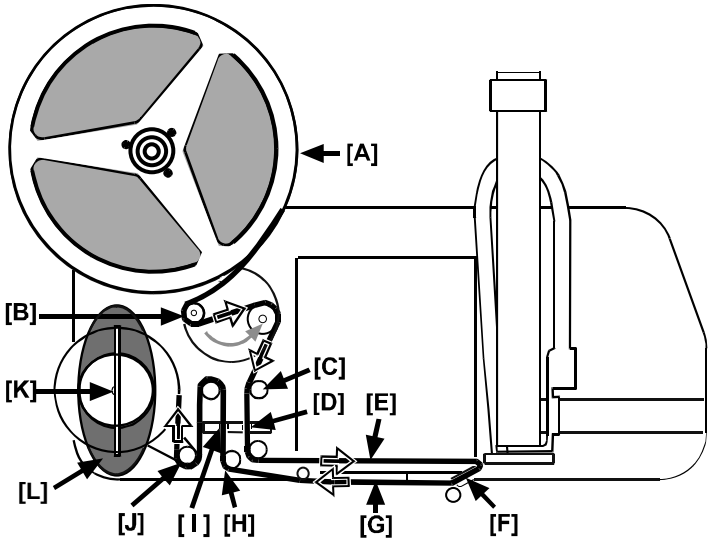

[A] Spool off from the top of the reel.
[B] Turn the dancer spindles. Thread the liner through the dancer spindles.
[C] Route the liner behind guide roller.
[D] Pass the liner between the fingers of the early label out sensor.
[E] Pass the liner behind the guide roller and through the edge sensor in the print engine. Make sure to follow the web path shown on the label inside the print engine.
[F] Route between peel blade and air assist tube. Take care not to route the labels under the air assist tube.
[G] Route the liner through the nip roller assembly.
[H] Pass the liner to the left side of lower guide.
[I] Pass through the liner through the fingers of the broken liner sensor.
[J] Route to the right of the guide and onto the top of the take-up spool.
[K] Wrap liner once around spool and secure in place with the spool clip.
[L] Use the rewind hub guide with supply rolls greater than 8 inch diameter.

8. Latch the printhead, the edge sensor and the pinch roller.

3.12 Loading the Ribbon

Follow the diagram of the ribbon path inside the print engine cover and refer to the printer manual for guides and warnings.

3.13 Minimum and Maximum Distances for the PA/5000 LT

Top Down Application

In this configuration, the PA/5000 LT applies labels on the top panel of a carton. For this setup, the distance from the bottom of the print engine to the floor must be greater than 9 inches and less than 48.5 inches.

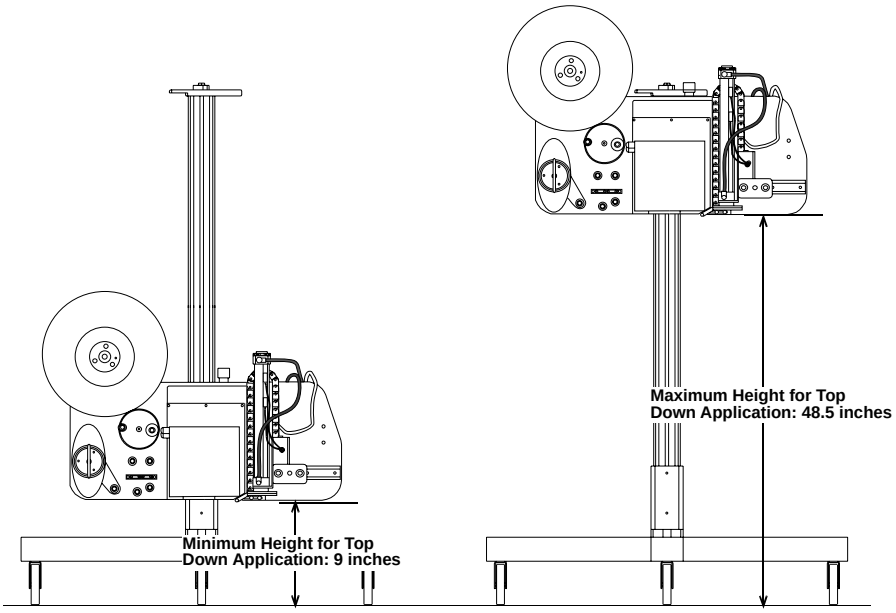

Side Panel Application, Nose Down

In this configuration, the PA/5000 LT applies labels to the side panel of a carton. For this setup, the distance from the peel blade to the floor must be greater than 15.5 inches and less than 50.5 inches.

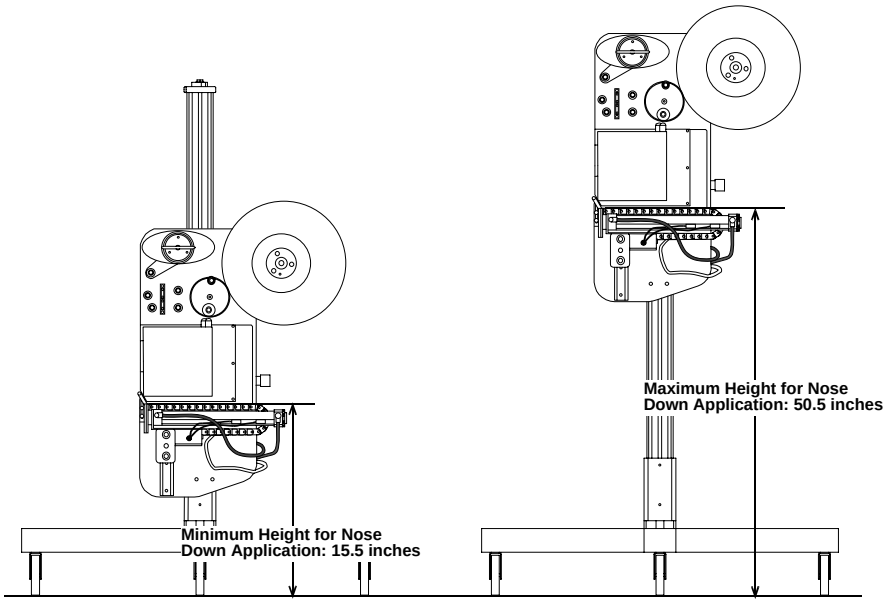

Side Panel Application, Nose Up

In this configuration, the PA/5000 LT applies labels to the side panel of a carton. The distance from the peel blade to the floor must be greater than 27.5 inches and less than 61 inches.

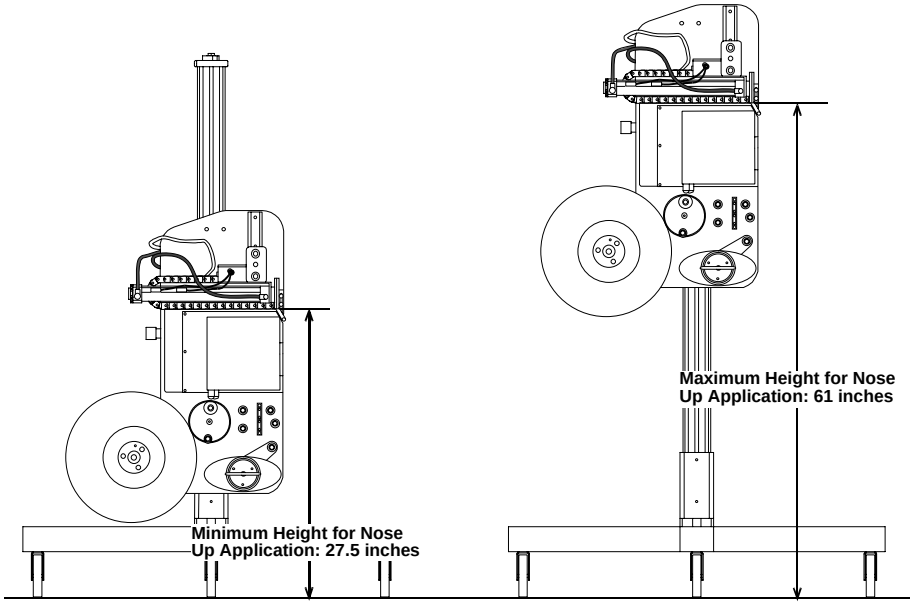

Bottom Up Application

In this configuration, the PA/5000 LT applies labels to the bottom panel of a carton. The distance from the tamp pad to the floor must be greater than 23.5-inches and less than 63.5-inches.

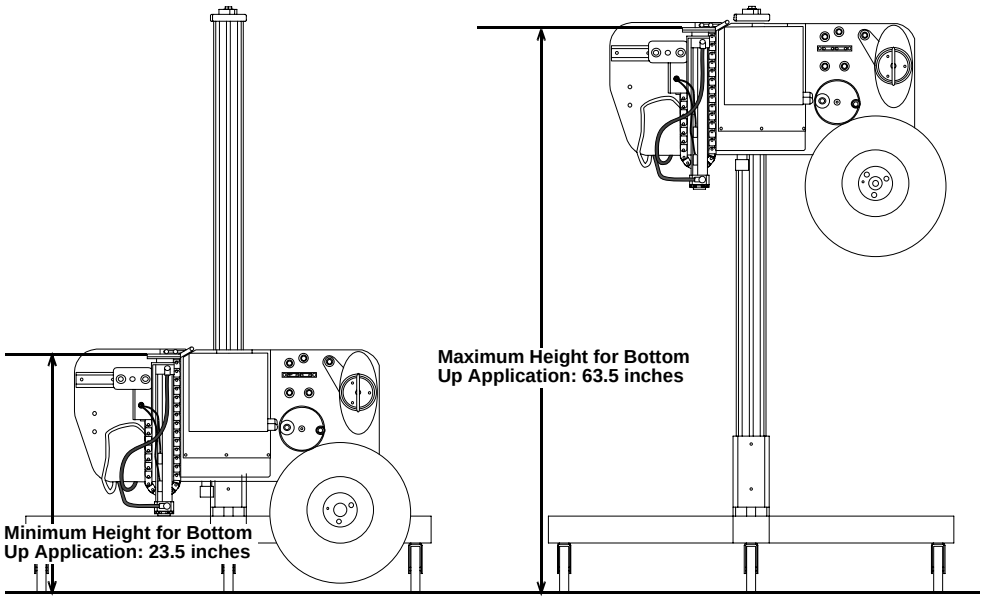

Section 4: Configuration

4.1 PA/5000 LT Configuration

This section covers handheld functions and configuration of the PA/5000 LT.

The menu functions can be accessed by typing the number or letter that designates that selection or by scrolling with the arrow keys until the cursor rests on the selection and pressing ENTER. For example, "B-Firmware Version" can be brought up from the Information menu by scrolling until it appears on the LCD or by pressing B.

Alt The contrast on the LCD can be adjusted with the Alt button and the up and down arrows.

Keypad Interface

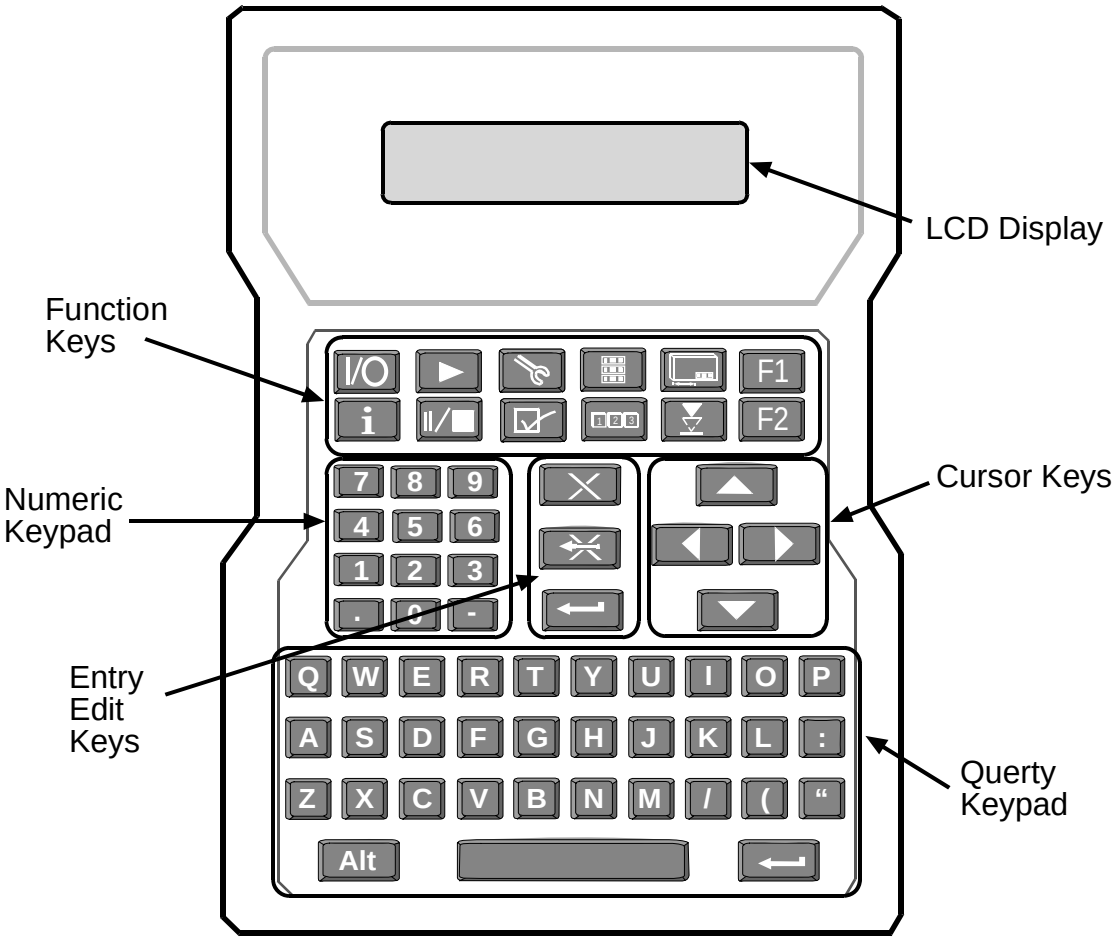

4.2 Function Key Assignments

Function Keys

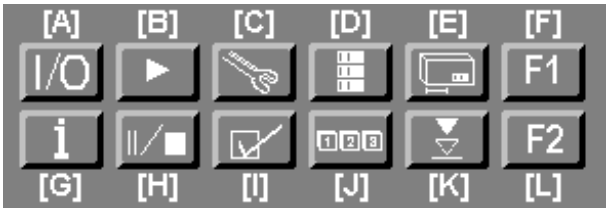

[A] ON/OFF for the 24-volt supply.

[B] RUN or RESUME when the 24-volt supply is ON.

[C] Set-Up menus (see Sections “4.3 System Setup Menu”and “4.4 Job Setup Menu”).

[D] Test label menu.

[E] Label offset (displays the sum of the photosensor distance and the application delay).

[F] Help menu.

[G] Information menu (see “4.6 Information / Status Functions”).

[H] Pause and Stop.

[I] Diagnostic menu (see “4.5 Diagnostics”).

[J] Test Print (functional only in the Setup menu or the Diagnostic menu).

[K] Quick Format Recall.

[L] Not used.

4.3 System Setup Menu

There are two levels of setup, System and Job. System Setup establishes parameters that most likely will require one time setup. These parameters include the printer type and photosensor distance. The Job Setup menus alter parameters that change for different product sizes, product heights, and product spacing. While System settings remain for all applications, Job settings change by the job.

If the system is in run mode, pressing the Alt button + the Setup button will halt the system. Pressing them a second time will display a request for a password. Access the System setup by pressing Alt + Setup for a password. Type the Supervisor password and press ENTER.

NOTE: The default password after installation is CHECKING. The system settings will be more secure if the supervisor password is changed after installation to a word known only to supervisors or other "need-to-know" personnel.

The parameters set through the System Setup menu will remain unchanged through most printing operations. After the initial configuration, it will not be necessary to access System Setup unless a major change is being made, such as adding an encoder or a second Photosensor.

The options accessed from the System Setup Menu are:

1 - Printer Type
2 - Line Speed
3 - Photosensor Distance
4 - Photosensor 1
5 - Photosensor 2
6 - Units
7 - Job Settings
8 - Label Settings
9 - Supervisor Password
A - Serial Communications
B - Discrete Outputs
C - Discrete Inputs
D - Menu Limited

Menu Option 1 - Printer Type

Printer Type selects the print engine installed in the PA/5000 LT system. Press ENTER when the LCD displays the manufacturer and model. Printer choices:

1 - Datamax All
2 - Sato 8460Se
3 - Sato 8485Se
4 - Sato 8490Se
5-Sato 8485Se RFID
6-Zebra All no RFID
7-Zebra All RFID

The controller detects and sets baud rate after the selection is made.

Note that the auto baud detection only scans through baud rates, not the number of stop bits and parity. If the baud rate can not be detected and a physical serial link between the print engine and MCA exists, check these parameters in the System Menu->Serial Com settings. Additionally, the print engine must be configured to reply to data requests by enabling the bi-com mode.

Note that if the print engine is utilizing an Ethernet card adapter or the serial cabling bypasses the MCA unit, the auto baud detection will not discover the printer's baud rate.

The setting of printer type defines the signal requirements to start printing labels and defines the format commands to use for label operations such as test print and cancel batch job.

Menu choices will change as Diagraph adds new models of print engines.

Menu Option 2 - Line Speed

Type in the conveyor speed in feet or meters per minute.

Menu Option 3 - Photosensor Distance

Photosensor Distance sets the distance from the photosensor to the peel blade on the print engine. An accurate distance is necessary for accurate label placement on the product. The range is 2 to 120 inches (5 to 305 cm).

Photosensor Distance **002 inches**

Menu Option 4 - Photosensor 1

Photosensor 1 allows the selection of the type of photosensor that will serve as the primary photosensor:

1-Diffuse Light - Diffuse reflective; its output is ON when the sensor detects light from its LED. The Diagraph standard photosensor assembly is a diffuse light sensor (5700-216).

2-Diffuse Dark - Diffuse reflective; its output is ON when the sensor does not detect reflected light from its LED.

3-Retro Light - Retro-reflective; its output is ON when the sensor detects light reflected from its retro-reflective target. (6105-372)

4-Retro Dark - Retro-reflective; its output is ON when the sensor does not detect light reflected from its retro-reflective target.

After the photosensor model selection is made, the screen will prompt for definition of the product edge that initiates the print and apply cycle: "Trigger Edge: 1-Leading Edge 2-Trailing Edge." After selection of 1 or 2, the LCD returns to the Setup menu.

Menu Option 5 - Photosensor 2

Photosensor 2 allows the selection of the sensing type and initiating product edge for a second photosensor. The submenus are the same as Photosensor 1 with one exception: the sensor type menu offers "5-Disabled" which allows the PA/5000 LT to ignore any input signal from the second photosensor.

Menu Option 6 - Units

Units sets the system of measurement used by the application system as

1-U.S. Customary

2-Metric

Menu Option 7 - Job Settings

Job Settings offers three choices:

1-Save Job Setting

2-Load Job Setting

3-Delete Job Setting

1-Save Job Setting allows the saving of settings from choices made in the Job Setup menu. By assigning a job name, multiple jobs can be quickly recalled by name when products change.

The display will prompt for a name entry - "Enter Setting Name" - and then allow the name to be saved or cancelled, or a new name to be entered. These setting names can have up to fifteen characters, including spaces. The system can store up to 99 jobs by name.

If the job setting database is full, the display will prompt "DB Full." If an attempt is made to enter a setting name that duplicates one already in the database, the screen will prompt "Name already exists." To free some space in the database, go to selection 3, Delete Job Setting.

2-Load Job Setting recalls settings stored under a job setting name. This same function is available as menu option A on the Job Setup menu. To select a name, scroll the stored names with the up and down arrows. In addition, partial name entry will display the closest name match to reduce typed characters. Names are stored alphabetically. Press ENTER when the display shows the selected name. The display will offer three choices:

1-OK. Load: (Selected Setting Name)
2-Cancel Load: (Selected Setting Name)
3-Enter New Name

Make a selection and press ENTER.

If there are no job settings to load, the screen will prompt "No Setting Available."

3-Delete Job Setting deletes the job setting name and the parameters associated with that job. To select a setting name, scroll the stored names with the up and down arrows. Names are stored alphabetically. Press ENTER when chosen name appears on the LCD. The display will offer three choices:

1-Cancel Delete
2-OK Delete
3-Choose New Setting

Make a selection and press ENTER.

If there are no job settings to delete, the display will prompt "No Setting Available."

Menu Option 8 - Label Settings

This selection has the following choices:

1-Save Label Setting

2-Load Label Setting

3-Delete Label Setting

4-Edit Label Text

These options are covered in detail in “Section 6: Label Format Storage”.

Menu Option 9 - Supervisor Password

Supervisor Password allows the modification of the Supervisor's password. This password allows access to the System and Job Setup Menus. This is the global access password. From the factory, **CHECKING** is the default Supervisor password. Type **CHECKING** when the display prompts "Enter Old Password." If the password is spelled incorrectly, the display will prompt "Wrong Password." Wait until the display requests the old password and try again. With successful old password entry, the prompt, "Enter New Password," will be displayed. Passwords can be up to fifteen characters long and can contain any of the letters or numbers on the handheld keypad. After new password entry, the prompt, "Verify New Password," will be displayed. Type the new password exactly as it was typed the first time. With successful duplicate password entry, the System Setup menu will appear. If the second entry of the password does not match the first entry exactly, the display will prompt "Verification failed" and the system will retain the original, old password.

If the Supervisor password should be forgotten or changed inadvertently, call Diagraph Service for access to the System Setup menu.

Menu Option A- Serial Communications

Serial Communications allows the set up of the communications.

- Printer Baud Rate

1-1200 Baud	4-9600 Baud	6-38400 Baud
2-2400 Baud	5-19200 Baud	7-57600 Baud
3-4800 Baud		

- PC Baud Rate

1-1200 Baud	3-4800 Baud	5-19200 Baud
2-2400 Baud	4-9600 Baud	

- Serial Bits Number

1-5 Bits	3-7 Bits	5-9 Bits
2-6 Bits	4-8 Bits	

- Serial Parity

1-None	2-Even	3-Odd

- Serial PC in Mode

1-Normal	2-Network Gateway

Note that the baud rate selection is utilized only for MCA driven commands and formats. Normal serial format information is sent directly to the print engine. The capture of a label format for storage is limited to 9600 bps. If permissible, set the Printer Baud and PC baud to be equal to avoid problems when switching from stored label formats and direct format transmissions.

Menu Option B - Discrete Outputs

Output Events allows the configuration of these outputs:

1-Relay Output K1	*6-Solid State Output 4
2-Relay Output K2	*7-Solid State Output 5
3-Solid State Output 1	*8-Solid State Output 6
*4-Solid State Output 2	*9-Solid State Output 7
*5-Solid State Output 3	A-Active Level (see "Failsafe" below)

*NOTE: Only applies to optional Discrete I/O Card, part number 6145-405.

After selecting a relay (K1 or K2) or a solid state output, the next menu displays a list of output events that will trigger the relay or switch.

1-None	E-Label Present
2-Printer Error	F-Label Ready
3-Media Out	G-Reject
4-Media Low	H-Shutdown
5-Broken Liner	I-Bad Scanner Read
6-Air Pressure Out	J-Good Scanner Read
7-Status On/Off	K-Not Scannable
8-Printer Power	L-Scanner Trigger
9-No Format to Print	M-Format Not Ready
A-All Errors	N-RFID Tag Good
B-All Warnings	O-RFID Tag Bad
C-Cycle Complete	P-RFID Tag Verify
D-Cylinder Home	Q-RFID Tag No Verify

Since the mechanical relays are slower than the solid state output, their best applications are those that do not occur quickly or with high levels of repetition. A good "trigger" event for a relay signal would be "5-Broken Liner". A solid-state output, with its frequent transition capability, would be best used with recurring events such as "G-Cylinder Complete" or "I-Label Present." See “Section 7: Discrete I/O”for directions on configuring the discrete outputs.

Failsafe Mode - The final choice on the Discrete Output menu is "A-Active Level". Pressing A brings up the Failsafe screen:

```
Failsafe Mode
1-YES 2-NO :2
```

Selecting **Yes** sets each individual output to normally closed. If the selected event occurs, the output will open. Selecting **No**, sets each individual output to normally open. If the selected event occurs, the output will close.

Menu Option C - Discrete Inputs

Discrete Inputs allows the configuration of these inputs:

1-Input A	*5-Input E
2-Input B	*6-Input F
3-Input C	*7-Input G
*4-Input D	8-Active Level (see "Failsafe" below)

*NOTE: Only applies to optional Discrete I/O Card, part number 6145-405.

After selecting an input, assign one of the following possible events to activate or trigger the input:

1-None
2-On/Off Line
3-Photocell 1
4-Photocell 2
5-Reject Label
6-Warning Fault 1
7-Warning Fault 2
8-Warning Fault 3
9-Error Fault 1
A-Error Fault 2
B-Error Fault 3
C-Bad Scan A
D-Good Scan A
E-Bad Scan AB
F-Reprint
G-Select Format
H-Load Format

See “Section 7: Discrete I/O”for directions on configuring the discrete inputs.

Failsafe Mode - The final choice on the Discrete Input menu is "8-Active Level". Pressing 8 brings up the Failsafe screen:

Failsafe Mode
1-YES 2-NO :2

Selecting **YES** sets the inputs to expect a voltage across the two input terminals. When the voltage is removed, the assigned event is triggered. Selecting **NO** is the opposite.

Menu Option D - Menu Limited

Menu Limited allows enabling or disabling the Limited Menu function. The limited menu has only six menu options but the full menu has thirteen. The two menus are shown for comparison below. Note that items five through nine and items B and C on the Full Job Setup Menu are not available on the Limited Job Setup Menu:

Limited Job Setup Menu	Full Job Setup Menu
1-Auto Retract	1-Auto Retract
2-Auto Retract Dwell	2-Auto Retract Dwell
3-Tamp Dwell Time	3-Tamp Dwell Time
4-Application Delay	4-Application Delay
5-Load Job Setting	5-Accessories
6-User Password	6-Repeat Print Count
	7-Repeat Tamp Count
	8-Wipedown Fault
	9-Load Job Setting
	A-Assign Job Label
	B-Load Job Label
	C-User Password

4.4 Job Setup Menu

Job Setup alters settings that change for different product sizes, spacing, and height. While system settings remain constant for all applications, job settings change by the job.

Press the Job Setup button, enter the User or Supervisor password. (When in Run, press any menu key to stop the machine, then press the Job Setup button.)

This menu has the following functions:

1-Auto Retract	8-Wipedown Fault
2-Auto Retract Dwell	9-Load Job Setting
3-Tamp Dwell Time	A-Assign Job Label
4-Application Delay	B-Load Job Label
5-Accessories	C-User Password
6-Repeat Print Count	D-Repeat Print Count
7-Repeat Tamp Count	E-Repeat Tamp Count

Menu Option 1 - Auto Retract

Auto Retract enables or disables the input signal from the auto-retract sensor. When enabled, this function forces the cylinder to retract to its home position when the auto-retract sensor detects an object. When disabled, this function blocks the auto-retract sensor signal and forces the cylinder to retract from either the end-of-stroke sensor signal or by the dwell time-out.

The display will prompt "Enable Auto Retract, 1-YES, 2-NO." The default is YES.

Menu Option 2 - Auto Retract Dwell

Auto Retract Dwell sets a time delay from the instant the auto-retract sensor detects an object until issuing a command for the cylinder to retract to its home position. This setting is ineffective if either the end-of-stroke sensor signal or the dwell time-out causes the cylinder to retract. It helps slow-stroke, light-touch applications in which the tamp pad contacts the product with the lightest possible touch. The maximum allowable auto-retract dwell time is 5000 milliseconds and the minimum is zero. The default is zero.

Menu Option 3 - Tamp Dwell Time

Tamp Dwell sets a time limit on how long the cylinder can extend. If the auto-retract sensor or the end-of-stroke sensor does not signal the cylinder to retract within this dwell time, this dwell time-out will command the cylinder to return to the home position. The default setting from the factory is 60 milliseconds and typical adjustment process consists of increasing the dwell time. Since each PA/5000 LT installation has its own unique characteristics and dwell time requirements, setting the dwell time is a process of trial and error.

Menu Option 4 - Application Delay

Application Delay adjusts the label placement on the product. The maximum offset value is 99.9 inches and the minimum is -99.9 inches. The sum of the application delay and the photosensor distance must be greater than zero. The type of photosensor (diffused or retro-reflective) and how it is used (leading edge or trailing edge) varies the application delay setting. Since each PA/5000 LT installation has unique characteristics and label offset requirements, setting the application delay will be trial and error. Adjust the setting by a tenth of an inch until the desired label placement is achieved.

Menu Option 5 - Accessories

Accessories sets the Print-on-Demand mode and the Secondary Wipedown unit.

Reprint Mode Enable. This function enables the reprinting of a label format and content if a label is removed before application on a box.

Applicator Mode. This mode allows the selection of applicator type per the following menu:

1. Tamp Only - This selects the activation of the tamp cylinder when the product is in position.
2. Tamp / Blow - This selects the activation of the tamp cylinder and the blow option. The blow will activate after the tamp cylinder has made contact with the product. (Used in conjunction with 6170-100 PA/5000 LT Tamp/Blow Option.)
3. Swing Only - This selects the rotary swing arm.
   - 2nd Apply Dwell: The length of time (in milliseconds) the arm swings out.
   - Delay for 2nd Print: The length of time (in milliseconds) between the arm's return to home and the next label being fed.
4. Tamp then Swing - This selects the tamp applicator followed by the swing operation.
   - 2nd Apply Distance: The number of inches between the first application position and the second application point.
   - 2nd Apply Dwell: The number of milliseconds the arm swings out.
   - Delay for 2nd Print: The number of milliseconds between the arm's return to home and the next label being fed.
5. Swing then Tamp - This selects the swing arm to activate before the tamp is fired.
   - (Same menu options as 4. Tamp then Swing.)
6. Tamp then Tamp - This selects two tamp applications per product. (An example of its use would be on a large product requiring two labels.)
   - (Same menu options as 4. Tamp then Swing.)
7. Swing then Swing - This selects two swing operations per product. (An example would be the use of a swivelling tamp pad to apply a label to adjacent panels.)
   - (Same menu options as 4. Tamp then Swing.)
8. FASA Once - The Front Apply Swing Arm, or FASA, can apply one or two labels per product trigger. In the Once mode, there is an added delay after application to allow the tamp pad to settle before the next label is printed.
   - Delay for 2nd Print: The number of milliseconds between the swing arm's return to home and the next label being fed.
9. FASA Twice - The Front Apply Swing Arm, or FASA, can apply one or two labels per product trigger. In the Twice mode, there is an added delay after each application to allow the tamp pad to settle before the next label is printed.
   - Delay for 2nd Print: The number of milliseconds between the swing arm's return to home and the next label being fed.
   - 2nd Apply Dwell: The length of time (in milliseconds) the arm swings out.
   - 2nd Apply Distance: The number of inches between the first application position and the second application point.

Shutdown Threshold. The number of times (between 0 and 10) the unit sees a consecutive bad scan before it will shut down and go into error mode. This menu option applies only when using a scanner as input on Discrete I/O.

Enable Demand Mode. In the normal print and apply mode, the printer prints and presents labels to the tamp pad and then backfeeds to print the next label - it does not require a separate photosensor signal to tell it when to print. However, when labels are printed intermittently, the printed label stays on the tamp pad for some time. This wait allows dust and debris to accumulate on the label adhesive. The accumulation can prevent the label from adhering to the package. The solution is demand-mode printing that does not print a label until it receives a signal from Photosensor 2.

When Accessories is selected from the menu selection, the LCD will prompt "Enable Demand Mode, 1-YES, 2-NO." The default is NO. If demand mode is selected, Photosensor 2 will be enabled, and the proper photocell type must be selected.

Enable Wipedown. This submenu sets the parameters for the wipedown cylinder and roller. The screen will prompt to "Enable Wipedown, 1-YES, 2-NO." Select "1-YES" to enable the wipedown function, or select "2-NO." Selecting "2-NO" will return the screen to the setup menu. When the wipedown function is enabled, a photosensor must be selected to signal its operation: Photosensor 1 or Photosensor 2. If Demand Mode is enabled, select Photosensor 1. The next screen prompts for the distance (in inches or centimeters) from the assigned photosensor to the secondary wipedown. Be as accurate as possible and use a tape measure if necessary. Press ENTER and the screen will prompt for a "Wipedown Dwell" time in milliseconds. Like the dwell time setting described earlier, the wipedown dwell is the time in milliseconds the wipedown cylinder will extend. The maximum allowable time is 5000 milliseconds. Because there are so many variables for successful wipedown, a best guess followed by adjustments is the preferred method to determine the best time for the system.

Discrete Out Time. The amount of time added to the output of Bad Scan A, Bad Scan B, or Bad Scans A + B. The length of time should not exceed the time between products. This menu option applies only when using a scanner.

Scanner Search Time. Amount of time (in milliseconds) that the unit will wait to see a signal reading (good or bad) from the scanner before the unit signals an error. This menu option applies only when using a scanner.

Enable Label Present. Enables and disables the label present sensor on the tamp pad. This sensor recognizes the need to regenerate a label if it is removed prior to application. It also senses a label that remains on the tamp pad after an unsuccessful application. If disabled, the unit assumes each label is properly fed to the tamp pad upon each print, and feeds a new label after every tamp stroke. When disabled, the unit can operate without the sensor, but this sacrifices the capabilities of label re-generation.

Automatic Online. Enabling this selection allows the unit to go to online immediately upon power-up. This can be useful to keep the unit online after power interruptions.

NOTE: If the power is interrupted, and the printer is running a batch print, the batch will be lost.

Menu Option 6 - Repeat Print Count

Repeat Print Count sets the number of consecutive labels to be printed before issuing an error status when the label-present sensor does not detect a label on the tamp pad. When enabled, the minimum is two labels and the maximum is ten.

For example, assume that the Repeat Print Count has been set to three and the PA/5000 LT is about to print a label with a sequence count of 100. The PA/5000 LT prints a label with a sequence count of 100.

1. For some reason, the label does not adhere to the tamp pad.
2. The label-present sensor does not detect a label on the pad and the PA/5000 LT, without extending the cylinder to apply the label, prints the next label with the sequence count of 101.
3. Again for some reason, the label does not adhere to the tamp pad.
4. Again, the label-present sensor does not detect a label and the PA/5000 LT prevents the cylinder from extending just as in step 3.
5. Since the Repeat Print Count is three, the system issues a "Repeat Print Error" instead of printing a third consecutive label with a sequence count of 102.
6. The system lights the red warning light and halts the print-and-apply operation.

Menu Option 7 - Repeat Tamp Count

Repeat Tamp Count sets the number of times the tamp applicator will attempt to tamp the same label onto a product. When enabled, the minimum number of attempts is two and the maximum is ten. This function prevents repeated attempts by the applicator to apply the same label. Possible causes of this condition are (1) a label that has flipped over with its adhesive side contacting the tamp pad; (2) a broken label-present sensor; or (3) the application delay offset was set incorrectly and the tamp pad does not contact the product.

For example, assume that the Repeat Tamp Count has been set to three and the PA/5000 LT just printed a label.

1. The label-present sensor detects the label. After an appropriate delay from a photosensor signal, the PA/5000 LT allows the cylinder to start its extension to apply.
2. For some reason the cylinder starts to retract without applying the label to a product (possible reasons are that the tamp dwell has been set too low or the auto-retract sensor detected the product too soon).
3. The cylinder returns to its home position with the label-present sensor still detecting the label.
4. Since the label is still on the pad, the PA/5000 LT prohibits another label from being printed and prepares for another cylinder extension to apply the original label.
5. Again after an appropriate delay from a photosensor trigger, the PA/5000 LT allows the cylinder to start its extension.
6. Again the cylinder returns to its home position with the label on the pad.
7. Since the Repeat Tamp Count is three, the system issues a "Repeat Tamp Error" instead of extending the cylinder for the third time.

The system lights the optional red warning tower and halts the print-and-tamp operation.

Menu Option 8 - Wipedown Fault

Wipedown Fault sets the system response to a fault associated with operating an optional wipedown unit. The choices are:

1-Error

2-Warning

3-Disable

Selection "3-Disable" is the simplest response to explain: the system ignores the fault and attempts to continue printing, applying and wiping on labels. This selection is only available when Photosensor 2 is the input signal for the secondary wipedown operation.

Selection "1-Error" is more complex: the system will shut down and indicate "Wipedown Error" as soon as the wipedown cycle completes without printing a next label.

With selection "2-Warning", the system continues to run while showing "Wipedown Warning" on the LCD and lights the yellow indicator on the warning tower.

Some of the possible causes of wipedown faults are:

1. The time interval between photosensor signals is too short.
2. A label remains on the tamp pad after a cylinder stroke.
3. An incorrect wipedown distance setting.

Menu Option 9 - Load Job Setting

Load Job Setting recalls settings stored under a job setting name. Names are stored alphabetically. To select a name, scroll the stored names with the up and down arrows or type the name. Press ENTER when the display shows the selected name. The display will offer three choices:

1-OK. Load: (Selected Setting Name)
2-Cancel Load: (Selected Setting Name)
3-Enter New Name

Make a selection and press ENTER.

If there are no job settings to load, the LCD will prompt "No Setting Available."

Menu Option A - Assign Job Label

Assign Job Label assigns a label format to a job. Assigning a job label will allow a job and a label to be recalled together.

If there are no job settings to load, the LCD will prompt "No Setting Available."

Menu Option B - Load Job Label

Load Job Label sends a label format to the print engine and uses the existing job label.

If there are no job settings to load, the LCD will prompt "No Setting Available."

Menu Option C - User Password

User Password allows the User's password to be changed. PA/5000 LT units ship from the factory with DIAGRAPH as the default User password. To change the user password, type DIAGRAPH when the display prompts "Enter Old Password." If the Password is spelled incorrectly, the display will prompt "Wrong Password." Wait until the display requests the old password and try again. With successful old password entry, the display will prompt "Enter New Password." Passwords can be up to fifteen characters long and can contain any of the letters, spaces or numbers on the handheld keypad. After new password entry, the display will prompt "Verify New Password." Reenter the new password exactly as it was typed the first time. With successful duplicate password entry, the Job Setup menu will appear. If the second entry of the password does not match the first entry exactly, the display will prompt "Verification failed" and the system will retain the original password.

4.5 Diagnostics

Diagnostics allow on-site testing of valves and sensors on the PA/5000 LT and require the Supervisor's password for access. All sensor tests require some preparation before starting:

- Put the system into pause mode.
- Make sure that the conveyor is not moving.
- Remove any labels adhering to the tamp pad and make sure the label present sensor is accessible.

WARNING: Conducting the diagnostic tests next to a moving conveyor can be hazardous.

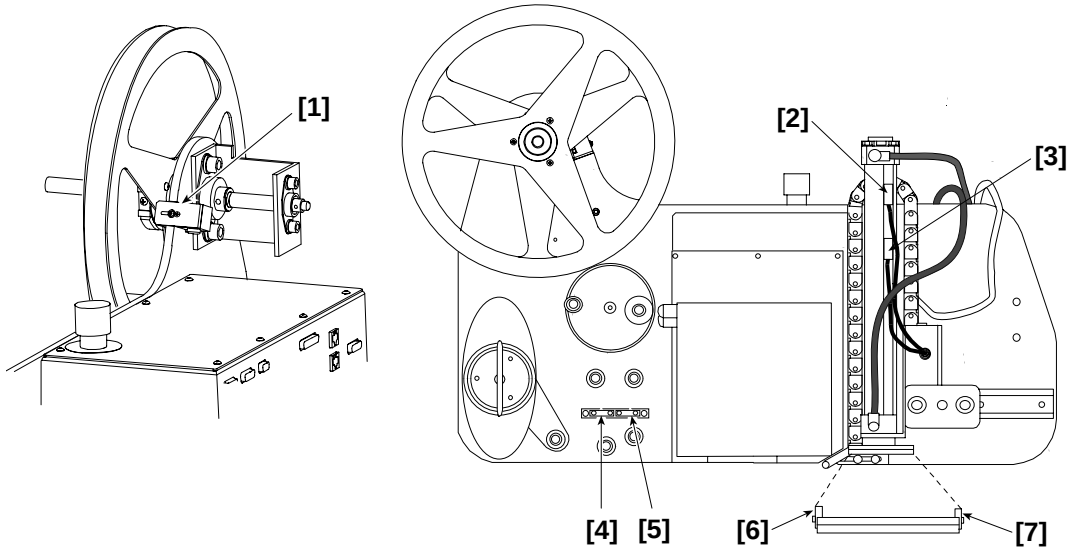

Sensors

[1] Label Low
[2] Cylinder Home
[3] End of Stroke
[4] Broken Liner
[5] Early Label Out
[6] Label Present
[7] Auto Retract

Diagnostic Guidelines

All sensor tests require user interaction. Sensor tests appear as selections 3, 4, 5, 6, 8, A, B, C, D, E and F on the Diagnostic menu.

Test sensors mounted on the chassis by placing a piece of white cardboard within their range of sensitivity.

Test sensors on the tamp pad by moving reflective object, such as a piece of cardboard or a label, within .75 inches of the tamp pad.

Test photosensors by moving the object in front of them.

Test sensors mounted on the cylinder housing by moving the cylinder up and down.

Tests for valves - 1, 2, 4, and G - turn ON the valves which remain ON. Press ENTER a second time to turn the valve OFF.

Most test screens will report that a sensor or valve is either ON or OFF. Other messages such as "Air Pressure Out" and "24V is Off" can appear. The first message means that the system has no air pressure and cannot perform any tests involving air. Check the OSHA shutoff valve on the air filter and the air line connection.

If the screen reports "24V is Off", press the I/O key and run the test again.

Starting Diagnostics

Note: Before Diagnostics can begin, the conveyor must be stationary. If the system employs an encoder, the encoder must also be still.

1.Turn off the rewind motor and vacuum. The LCD will prompt "Enter Password."

2.Type in the Supervisor's password. "Diagnostic Menu" will appear in the first line of the display and "1-Air Assist" will appear on the second. All other selections can be viewed by either typing the selection number or letter or by scrolling with the arrows until the selection appears on the LCD. Press ENTER.

3.Several things occur when a menu selection is made: the system activates a sensor test or toggles a valve and the LCD reports status. To turn a valve OFF, press ENTER a second time.

The Diagnostic menu has the following options:

1-Air Assist	B-Label Present
2-Rewind Motor	C-Liner Sensor
3-Auto Retract	D-Photosensor 1
4-Cylinder	E-Photosensor 2
5-Cylinder Home	F-Vacuum
6-Discrete Outputs	G-Warning Tower
7-Discrete Inputs	H-Wipedown
8-Early Label Out	I-Serial Com
9-End of Stroke	J-Blow Valve
A-Label Low	K-RFID Reader

Menu Option 1 - Air Assist

Air Assist toggles air on and off at the air assist tube. The air will remain ON until a key is pressed.

Menu Option 2 - Rewind Motor

Rewind Motor toggles on and off when the dancer arm is raised and lowered. The motor will remain ON until a key is pressed.

Menu Option 3 - Auto Retract

Auto Retract tests the auto-retract sensor. Place a piece of cardboard under the sensor and watch the LCD report "ON" when the cardboard is close to the sensor and "OFF" when the cardboard moves away.

Menu Option 4 - Cylinder

Cylinder can test the cylinder operation both with and without impact. To test with impact, place a box in the path of the cylinder stroke. The LCD will prompt "Number of Cycles." Type a number between 1 and 9999 and press ENTER. A properly operating cylinder will extend, touch the box and retract the number of times that were typed. The LCD will count each cylinder cycle as it occurs until it reaches the number that was typed. The upper right corner of the screen will report the signal source that caused the cylinder to retract or indicate the status of the cycle (see below).

To test the cylinder without impact, select "4-Cylinder", remove the box, and type a number between 1 and 9999. Press ENTER. A properly operating cylinder will extend and retract the number of cycles that were typed. The upper right corner of the screen will report the signal source that caused the cylinder to retract or indicate the cycle status:

A stands for auto retract sensor signal;

E stands for end of stroke sensor signal;

D stands for a dwell time out; and

H stands for the cylinder home sensor signal.

Menu Option 5 - Cylinder Home

Cylinder Home tests the cylinder home sensor. To run this test, turn the air pressure OFF at the OSHA safety valve. Turning the pressure OFF allows the tamp pad and cylinder to be moved so that the cylinder home sensor can detect cylinder movement.

The LCD will report "Sensor ON" at the beginning of this test and the LED on the cylinder home sensor will be ON. Move the tamp pad and cylinder away from its home position and watch both the LCD and the cylinder home sensor. The LCD will report "Sensor OFF" and the LED on the sensor will turn OFF. Push the tamp pad back to its home position and the LCD will report "Sensor ON" and the LED on the cylinder home sensor will turn ON again.

Turn the air pressure ON again at the OSHA safety valve.

Menu Option 6 - Discrete Outputs

Discrete Outputs tests the two relays (K1 and K2) and the solid state outputs that were configured with menu selection D of the System Setup. The following illustration shows the test setup and connections necessary for a successful test. During this sequence, the output line will be toggled ON and OFF at a rate of 1 Hz.

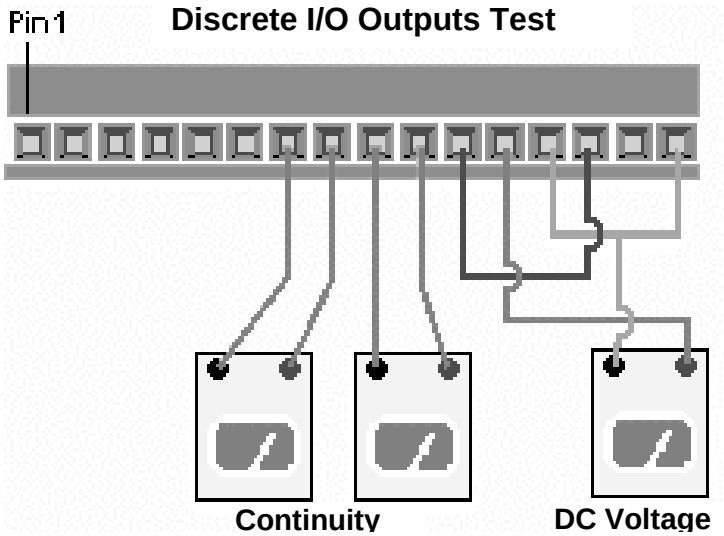

With selection 6 of the Diagnostic menu on the LCD, press ENTER. The LCD will briefly display "Discrete Output 1" and then start the test of K1:

```
Relay K1
Press Enter for Next
```

Press ENTER. The LCD will briefly display "Discrete Output 2" and then start the test of K2:

```
Relay K2
Press Enter for Next
```

Press ENTER. The LCD will briefly display "Discrete Output 3" and then start the test of the solid state switches:

```
DOUT1
Press Enter for Next
```

Press ENTER and the LCD will continue to scroll through the remaining solid state outputs. When it has scrolled through the final solid state output, it will return to menu selection 6 on the Diagnostic menu.

See “Section 7: Discrete I/O”for directions on configuring the discrete outputs.

Menu Option 7 - Discrete Inputs

Discrete Inputs tests the discrete inputs that were configured with menu selection E of the System Setup.

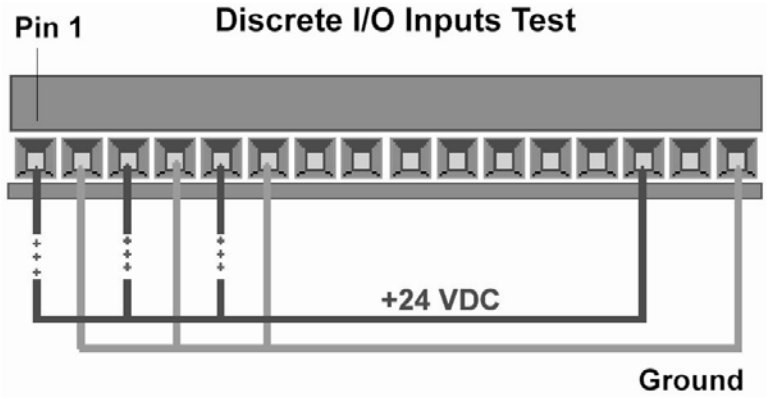

Set up connections as shown above and select 7 in the Diagnostics menu. Press ENTER. The LCD will briefly display "Discrete Inputs" then show test results for the current states for inputs A through G. Results will be either one or zero.

A:1 B:1 C:0
Press ENTER to Stop

“Section 7: Discrete I/O”has directions for configuring the discrete inputs.

Menu Option 8 - Early Label Out

Early Label Out tests the early-label-out sensor. Insert a piece of scrap cardboard into the channel of the sensor and watch the LCD. When the cardboard is not in the channel, the LCD will show "Sensor ON" and when the cardboard is in the channel, the LCD will show "Sensor OFF."

Menu Option 9 - End of Stroke

End of Stroke tests the end-of-stroke sensor on the cylinder. To run this test, turn the air pressure OFF at the OSHA safety valve. Turning the pressure OFF allows movement of the tamp pad and cylinder so that the end-of-stroke sensor can detect cylinder movement.

The LCD will report "Sensor OFF" at the beginning of this test and the LED on the end-of-stroke sensor will be OFF. Move the tamp pad and cylinder away from its home position and watch both the LCD and the end-of-stroke sensor. When the cylinder enters the area sensed by the end-of-stroke sensor, the LCD will report "Sensor ON" and the LED on the sensor will turn ON. Push the tamp pad back to its home position and the LCD will report "Sensor OFF" and the LED on the end-of-stroke sensor will turn OFF.

Turn the air pressure ON again at the OSHA safety valve.

Menu Option A - Label Low

Label Low tests the label-low sensor.

At the start of this test, the LCD will show the current sensor status which will either be ON or OFF. To run the test, grasp the label stock roll on the supply spindle and move it slightly away from the label-low sensor. Watch the LCD as the label roll is moved. When the roll is out of sensor range, the LCD will change its status report.

It is not necessary to completely remove the label roll. Push it back onto the spindle and the LCD will change to "Sensor ON."

Menu Option B - Label Present

Label Present tests the label-present sensor. Place a piece of cardboard under the sensor and watch the LCD report "ON" when the cardboard is close to the sensor and "OFF" when the cardboard moves away.

Menu Option C - Liner Sensor

Liner Sensor tests the broken-liner sensor. Insert a piece of scrap cardboard into the channel of the sensor and watch the LCD. When the cardboard is not in the channel the LCD will show "Sensor ON" and when the cardboard is in the channel, the LCD will show "Sensor OFF."

Menu Option D - Photosensor 1

Photosensor 1 tests the primary photosensor.

To run the test, wave a piece of cardboard in front of the photosensor. Watch the LCD and the LED on the photosensor. In a successful test, the LCD will report a change in state as the cardboard passes in front of the photosensor and the LED will turn on and off or off and on depending on the type of photosensor.

Menu Option E - Photosensor 2

Photosensor 2 tests the second photosensor if the system has two.

To run the test, wave a piece of cardboard in front of the photosensor. Watch the LCD and the LED on the photosensor. In a successful test, the LCD will report a change in state as the cardboard passes in front of the photosensor and the LED will turn on and off or off and on depending on the type of photosensor.

Menu Option F - Vacuum

Vacuum toggles the vacuum on and off at the tamp pad. The vacuum will remain ON until a key is pressed.

To run the test, hold a scrap label against the tamp pad and feel the pull the vacuum exerts on the label. The LCD will report "Vacuum Valve ON."

Menu Option G - Warning Tower

Warning Tower tests the operation of the optional warning tower.

To start the test, press ENTER. The lights on the tower will turn ON and OFF in sequence from top to bottom and the LCD will report "Warning Tower Test, ENTER to Stop." Press ENTER again to stop the test.

Menu Option H - Wipedown

Wipedown tests the secondary-wipedown unit if one is attached to the system.

To run the test, press ENTER and the cylinder-driven arm will extend and retract. The LCD will show "Wipedown Test" and report the dwell setting for cylinder retraction.

Menu Option I - Serial Com

Serial Com tests serial ports of the PC and the print engine (PE). To test for RS-232, RS-422 and RS-485, the plugs need to be wired as shown below:

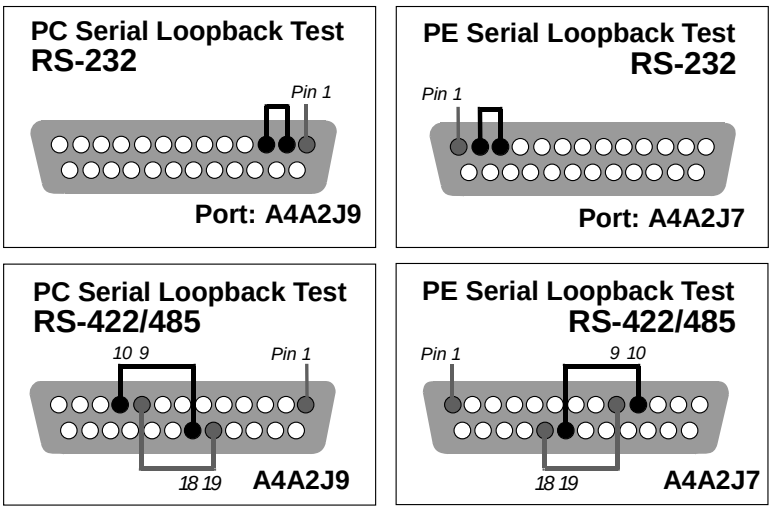

Connect plugs and press ENTER. The LCD will respond "PE COM SUCCESSFUL" and "PC COM SUCCESSFUL" for successful connections.

Menu Option J - Blow Valve

Blow Valve toggles the blow on and off at the tamp pad and will remain on until a key is pressed.

To run a test, turn it on and place a hand in front of the tamp pad to feel the air flow.

Menu Option K - RFID Reader

This choice allows the TampTenna™ to be used as a reader for 64 and 96 bit Class 1 RFID tags. The screen will display a single tag in the field of the tamp pad within six inches. The raw tag data will be displayed in hexadecimal, and will remain on the screen until another tag is read.

4.6 Information / Status Functions

INFORMATION MENU

All selections can be made by either typing the number or scrolling with the arrow keys until the cursor rests on the selection and pressing ENTER. All information screens clear by pressing ENTER. This function can be accessed during a print and apply operation.

1-System Times
2-System Counters
3-Job Counters
4-Retract Cause
5-Wipedown Cycle
6-Firmware Versions
7-CPU / Memory Usage
8-Scanner Counters
9-Product/Min
A-Efficiency
B-RFID Status
C-RFID Verify Read
D-RFID Counters

Menu Option 1 - System Times

System Times will display a continuous sequence of Print Time, Application Time and Down Stroke Time.

Print Time: Displays the time, in milliseconds, of the last printed label feed.

Application Time: Displays the time, in milliseconds, of the downstroke, auto-retract delay, and return stroke of the apply process.

Down Stroke Time: Displays the travel time, in milliseconds, for the tamp cylinder to leave its home position and contact the product.

Menu Option 2 - System Counters

System Counters will display a continuous sequence of Labels Printed, Tamp Counter and Application Counter. Labels Printed shows the total number of labels printed. Tamp Counter shows the number of times that the tamp cylinder has extended and returned to the home position. Application Counter shows the total number of applications. These counts can not be reset.

Menu Option 3- Job Counters

Job Counters will display a continuous sequence of Job Printed Count, Job Tamp Count and Job Applied Count. Job Printed Count shows the number of labels printed for a job. Job Tamp Count shows the number of times the tamp cylinder extended and returned to the home position for a job. Job Applied Count shows the number of times the tamp cylinder extended with a label and the label was removed. These counts can be reset by pressing the ALT and R keys.

Menu Option 4 - Retract Cause

In systems with tamp applicators, this selection identifies what caused the cylinder to retract during its last application cycle. The screen will report "Auto Retract" if the auto-retract sensor detected a box or some other object very close to the tamp pad (3/4 inch or less). Another possible cause is "End of Stroke" which will appear if the end-of-stroke sensor sensed that the cylinder reached the end of its stroke without contacting a product (Section “5.2 Adjusting the Tamp Applicator” explains how to position the Cylinder Home and End of Stroke sensors). The third possible cause is "Dwell Time." This message appears if the cylinder extends and the dwell time expires before the auto-retract sensor detects a product or the cylinder reaches the end of its stroke. (Section “4.4 Job Setup Menu” explains how to set the dwell time in the Job menu.)

Menu Option 5 - Wipedown Cycle

Wipedown Cycle shows the stages of the wipedown cycle.

Menu Option 6 - Firmware Versions

Firmware Versions shows the versions of PA/5000 LT and RFID firmware installed.

Menu Option 7 - CPU / Memory Usage

CPU Usage shows the current, maximum and minimum use of the CPU. Label Memory shows the amount of free memory for label storage. (The maximum storage space available is 600K.) The information will look something like the screen emulation below. This option can be reset by pressing the ALT and R keys.

```
Cpu Usage
63% Max 69% Min 19%
```

Menu Option 8 - Scanner Counters

Scanner Counters will display a continuous sequence of Good/Bad Scans, Reject Counter and Shutdown Counter. Good/Bad Scans shows the number of good scans and the number of bad scans when used with an external scanner. Reject Counter will indicate the number of bad counts in applications where there are two Applicators and two Scanners per product. Shutdown Counter shows the number of times the system shuts down, or went off line, due to bad scans. This counter is used in applications where there are two Applicators and two Scanners per product. These counts can be reset by pressing the ALT and R keys.

Menu Option 9 - Product/Min

Products per Minute indicates two values: Average product per minute and Peak products per minute. This count can be reset by pressing the ALT and R keys.

Menu Option A - Efficiency

Efficiency shows the time (in minutes) that the unit was on-line and running (Uptime), and the number of minutes the unit was off-line or in pause mode (Downtime). This count can be reset by pressing the ALT and R keys.

Menu Option B - RFID Status

The menu displays the current status and programming time of the last RFID tag encoded. Typical displayed messages are: Tag OK: 160 mS, Erase Fail, Program Fail, Tag Locked, etc. Upon power-up, and before the first tag is encoded, this menu displays the current active antenna port, either Ant 0 or Ant 1.

Menu Option C - RFID Verify Read

This menu displays the last hexadecimal data value read back from the applied tag on the product through the TampTenna™. Prior to the first label applied after a new printer batch is loaded, this screen displays the captured RFID content data from the serial data stream. This is useful for diagnostic troubleshooting and verification of RFID content in the data stream.

Menu Option D - RFID Counters

RFID Counters will display a continuous sequence of Good Write, Erase Fail, Program Fail, H/W Error and Verify Error.

4.7 Label Menu

Access the Label Menu. All selections can be made by either typing the number or scrolling with the arrow keys until the cursor rests on the selection and pressing ENTER. All information screens clear by pressing ENTER.

1-Print Test Label

2-Clear Printer Job

3-Reprint Last Labe[l]

4-Print Settings

Menu Option 1 - Print Test Label

Print Test Label prints labels in the test format and allows the user to specify the length, width, and quantity.

Menu Option 2 - Clear Printer Job

Clear Printer Job removes all print jobs sent to the print engine.

Menu Option 3 - Reprint Last Label

Reprint Last Label prints a copy of the previously printed label format.

Menu Option 4 - Print Settings

Print Settings shows the current length and width set for labels and allows the user to alter these dimensions (13 inches maximum for length and 7 inches maximum for width). When ENTER is pressed after the label width display, the PA/5000 LT prints a system setup label (see example at right).

PA/5000 LT SYSTEM SETUP

Station	: 001
Version	: 1.00
Job Name	: Apple
Label Memory Free	: 524 K
Print Counter	: 0000033966
Tamp Counter	: 0000033869
Application Counter	: 0000033351
Job Print Count	: 0000032401
Job Apllication Count	: 0000031893
Application Delay	: 04.0 inches
Photocell Distance	: 7 inches
Photocell 1 Type	: Disffuse Light
Photocell 1 Edge	: Leading Edge
Photocell 2 Type	: Disffuse Light
Photocell 2 Edge	: Leading Edge
Encoder Enabled	: YES
Compensation Enabled	: YES
Fixed Line Speed	: 000.0 ft/min
Auto Retract Enabled	: NO
Auto Retract Dwell	: 0000
Tamp Dwell Time	: 0200
Reprint Enabled	: NO
Demand mode Enabled	: NO
Wipedown Enabled	: NO
Wipedown Distance	: 300.0 inches
Wipedown Dwell	: 0010

Section 5: Mechanical Adjustments

5.1 Pneumatic Adjustments

All adjustments to controls in the pneumatic control module are application dependent. Since each application is unique and has many variables, the instructions in this section can only provide general guidelines and ranges for settings.

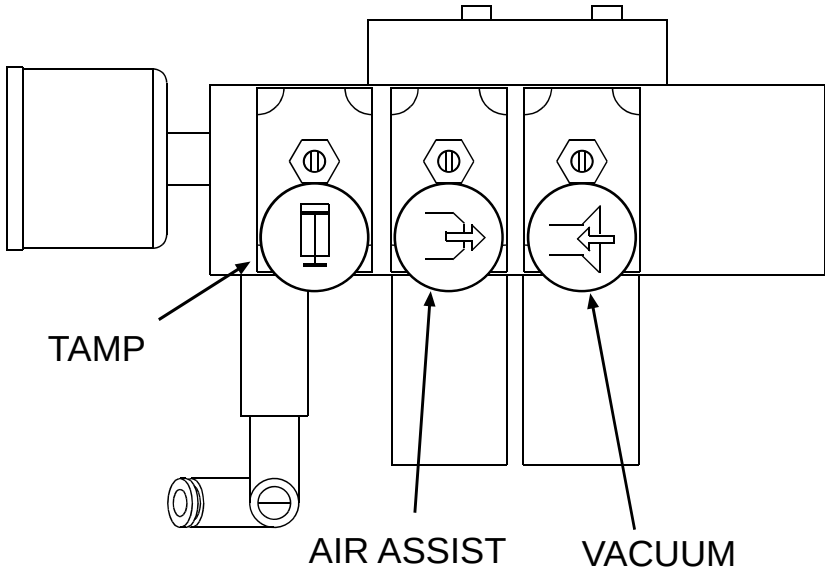

Guidelines:

Application speed, label size, label material and product are all variables that impact the air pressure settings.

Control	Range	Nominal
Tamp	10 to 60 PSI	25 to 30 PSI
Air Assist	10 to 60 PSI	5 to 20 PSI
Vacuum	10 to 60 PSI	25 to 30 PSI

5.2 Adjusting the Tamp Applicator

Perform this procedure to ensure that the position and sensitivity of the tamp assembly sensors are properly set. Failure to adjust the sensors properly may result in poor application performance or damage to equipment or product.

Tools: 1.5 mm hex wrench and a screwdriver

CAUTION: Make sure that the conveyor is stopped before performing this procedure.

1. Make sure that the tamp assembly is properly mounted to the baseplate and the tamp pad is properly positioned with the peel blade as shown in Section “3.6 Attaching the Tamp Assembly”.
2. Power ON the unit and ensure that the home sensor LED **[A]** on the cylinder is lit with the cylinder fully retracted. If it is not lit, adjust the position of the sensor. Loosen the sensor hold-down screw and move the sensor by hand.
3. Position the PA/5000 LT next to the conveyor in the orientation used for production.

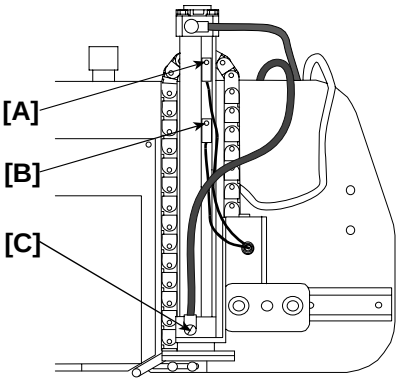

CAUTION: Make sure that the conveyor is stopped before performing this procedure.

4. Place a product on the conveyor in the stroke path of the applicator just as it will be applying in normal production.
5. Shut OFF air to the unit at the shutoff on the main air filter (Section “3.5 Mounting the Air Filter Assembly to the Stand”).
6. Turn the flow control **[C]** on the cylinder fully counterclockwise.
7. Manually extend the tamp cylinder until the tamp pad contacts the product surface.
8. Raise the tamp pad slightly and adjust the PA/5000 LT yoke until the tamp pad is completely parallel to the surface receiving the label.
9. Manually return the tamp pad to the cylinder's fully retracted position and turn ON the air supply.
10. Move the test product out of the path of the tamp pad to a position just behind the label present sensor.
11. Move the end of the stroke sensor **[B]** to its farthest position away from the home sensor **[A].**

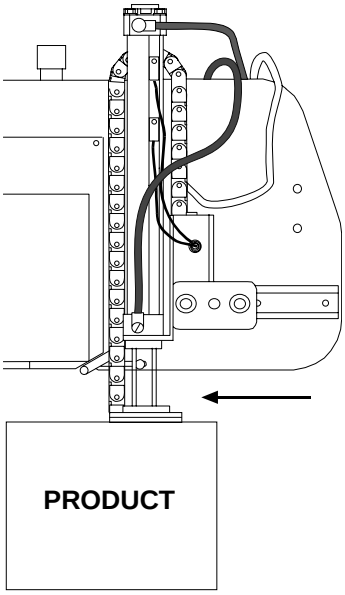

12. Power ON the unit and access the Diagnostics menu by pressing the diagnostic menu button.
13. Type the password to access Diagnostics, scroll to "Cylinder," and push ENTER.

CAUTION: This test will extend the cylinder repeatedly; make sure that the stroke path is clear and the conveyor stopped before continuing.

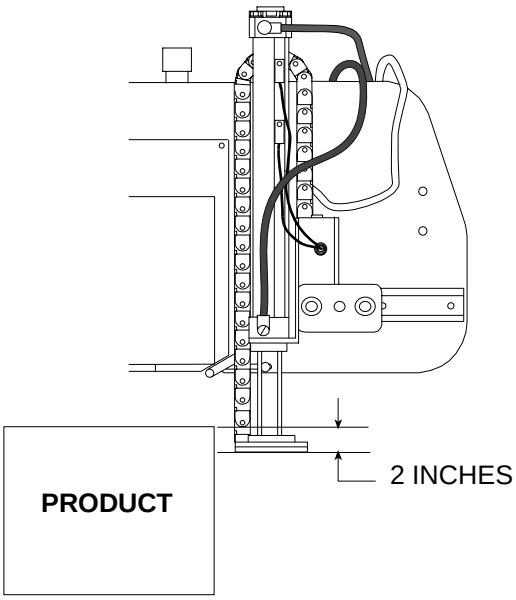

14. When prompted for the number of cycles, type a large number (30 or more) and press ENTER.
15. The tamp pad should stroke approximately two inches past the application surface of the product placed next to it.
16. The code in the bottom right corner of the display should show "DH" (see Diagnostics for description).
17. If the pad does not extend approximately two inches past the product surface, press ENTER to stop the test and enter the Job Setup menu. Adjust the Tamp Dwell Time in the Setup menu and repeat steps 11 through 15. When the tamp dwell is adjusted correctly, continue running the cylinder diagnostics.
18. Loosen the end-of-stroke sensor **[B]** and move it toward the home sensor **[A]** until the sensor code onscreen changes from DH to EH and the cylinder stroke is one inch past the product surface.
19. Secure the end-of-stroke sensor in this position.
20. Stop the cylinder test by pressing ENTER.
21. Ensure that the auto retract function is enabled in the system setup menu.
22. Position the product in the stroke path of the applicator just as it will be applying in normal production.
23. Restart the cylinder test and the sensor code should show AH.
24. Adjust the flow control **[C]** on the cylinder clockwise until the pad touches the product with the "appropriate" force (this is application and product specific).
25. Repeat steps 11 through 20.
26. Stop the cylinder test and exit the Diagnostics menu.
27. Record the dwell time on the System Configuration form.

CAUTION: Do not start the conveyor until the delay procedure is complete.

5.3 Setting the Delay (Label Offset)

CAUTION: Make sure that the conveyor is stopped before performing this procedure.

This configuration procedure has two parts: The first part sets an approximate position for the label on the product without allowing the tamp pad to touch the product; and the second part finalizes the label position and allows the tamp pad to make product contact.

Approximating the Label Placement

The key to this procedure is to set the tamp dwell time long enough to extend the cylinder but short enough to prevent the cylinder from reaching the product.

1. Set the tamp dwell time to 50-msec. (depending on the cylinder length and tamp-pad size, more time may be required).
2. Measure the distance between Photosensor 1 and the print engine peel blade. Use tape measure if necessary. Enter the distance in System Setup as shown in Section “4.3 System Setup Menu”.
3. Determine the type (diffuse or retro-reflective) of Photosensor 1 and the edge which will be used for photosensor product detection (leading or trailing). Enter the type and the edge (Section “4.3 System Setup Menu”).
4. Enable the encoder if used with selection 2 in the System Setup menu; otherwise, determine the actual line speed of the conveyor with a tachometer if necessary.
5. Set the application delay to zero with selection 4 in the Job Setup menu (Section “4.4 Job Setup Menu”).
6. Check again that the products on the conveyor will not collide with the tamp assembly and CAREFULLY start the conveyor with products.

   Note that the first cylinder stroke may be shortened due to friction.

7. Determine by sight approximately where the tamp-pad will make contact with products.
8. Adjust the application delay (label offset distance) according to the label placement specification. Increasing the delay will move the label away from the product leading edge and decreasing the delay will move it toward the leading edge (see Section “4.4 Job Setup Menu”).

Setting the Label Placement

1. Make sure that the tamp-pad will contact the top or side of the product.
2. If it does not make contact, increase the dwell time by 10-msec. and press the run/resume key. Continue increasing it until it hits the box.
3. Determine by observation where the tamp-pad is hitting the products: increase the application delay if the label needs to be moved away from the leading edge of the product and decrease the delay if the label needs to be moved closer to the leading edge.
4. Repeat this dwell time increase and application delay adjustment until the proper label placement has been achieved.
5. Re-enter the dwell time setting determined earlier.

Section 6: Label Format Storage

The PA/5000 LT allows label formats to be sent from a PC and to be stored on the MCA. There is 400K of available memory using the Handheld unit. A stored label format can be recalled and loaded to the print engine.

To store a label format, a PC must be connected which is running a label design program compatible with the print engine of the PA/5000 LT. Diagraph recommends and supports the use of EasyLabel for Windows.

6.1 Capturing a Label Format

EasyLabel must have the same baud rate specified as the LT's PC serial port. i.e., 9600.

1. Select a label format in the Labeling software.
2. Using the Handheld unit, access the System Setup menu.
3. Select option 9 - Label Settings.
4. The LCD displays the Label Settings Menu.
5. Select Option 1 - Save Label Setting
6. The LCD displays Enter label name.
7. Enter a name of the label and press ENTER.
8. Select option 1 - OK Save.
9. The LCD displays Capture Format.
10. Select Option 1 - Yes.
11. Send the label format from the PC to the PA/5000 LT.
12. The LCD displays the downloading progress of the label size.

6.2 Loading a Label Format to the Print Engine

There are two methods of loading a label format to the print engine: Load a label from the System Setup menu, or assign the label to a job from the Job menu.

Loading a Label in the System Setup menu

This method sends a label format to the print engine and uses the current job settings.

The print engine must have the same baud rate as the LT's PE serial port.

1. Using the Handheld unit, access the System Setup menu.
2. Select option 9 - Label Settings
3. The LCD displays the Label Settings menu. Press ENTER to continue.
4. Select Option 2 - Load Label Setting
5. The LCD displays the Label Name menu. Enter a label name and press ENTER to select label.
6. The LCD displays Load Label. Select Option 1 - Yes.

7. The LCD displays Clear Job. Select YES to clear any jobs currently loaded to the print engine, or NO to add the job.
8. The LCD prompts for the label quantity. Enter label quantity.
9. The LCD displays the downloading progress of the label format.

Assigning the Label Format to a Job

This method assigns a label format to a particular set of job parameters. Loading the job sends all job parameters and the label format to the print engine.

1. Using the Handheld unit, access the Job Menu.
2. Select option B - Assign Job Label.
3. The LCD displays Enter label name.

Loading a Job Label

1. Select option C - Load Label.
2. The LCD displays Load Label. Select Option 1 - Yes.
3. The LCD displays Clear Job. Select YES to clear any jobs currently loaded to the print engine, or NO to add the job.
4. The LCD prompts for the label quantity. Enter label quantity.
5. The LCD displays the downloading progress of the label size.

6.3 Changing Text Design in Print-Engine Resident Fonts

This procedure allows editing of text on stored label formats.

1. Using the Handheld unit, access the System Setup menu.
2. Select option 9 - Label Settings.
3. The LCD displays the Label Settings menu
4. Select option 4 - Edit Label Text.
5. Select a label to edit.
6. The LCD displays all resident font text fields, one by one. Enter new text, or press Enter to move to the next text field.

6.4 Deleting Stored Label Formats

This procedure allows deleting of text on stored label formats.

1. Using the Handheld unit, access the System Setup menu.
2. Select option 9 - Label Settings.
3. The LCD displays the Label Settings Menu.
4. Select option 3 - Delete Label Setting.
5. Select a label to delete.
6. The LCD displays Delete Label. Select Option 2 - Yes.

Section 7: Discrete I/O

7.1 Functional Description

The PA/5000 LT Discrete I/O board contains two relay outputs, one solid state output, and three opto-isolated inputs. The Discrete I/O allows a Programmable Logic Controller to monitor the operations of a PA/5000 LT and control the label application. The discrete outputs provide the operational status of the PA/5000 LT, label and ribbon supply status, tamp cylinder position, and label detection. The inputs allow a PLC to start and stop the printing process, and send product detect signals to the PA/5000 LT.

7.2 PA/5000 LT Discrete Board Electrical Specifications

DC Voltage Source

Voltage Source - Non-isolated	24 VDC @ 500 mA

Relay Outputs

Close Time Delay	3 ms max.
Open Time Delay	3 ms max.
Bounce Time	3 ms max.
Rated Load	750 mA @ 24 VDC (max.)

Solid State Output

On Time Delay	2 ms max.
Off Time Delay	2 ms max.
Load Current (Minimum)	10 mA @ 24 VDC
Rated Load (Maximum)	500 mA @ 24 VDC
Operating Voltage	10 VDC - 24 VDC sink

Opto-isolated Inputs

Load Current (Nominal)	12.5 mA
Load Current (Maximum)	80 mA
Operating Voltage	5 VDC - 24 VDC sink

Event Response

Output Event response time	8 ms max.
Input Event response time	6 ms min.

7.3 Discrete I/O Configuration

Each Input and Output has a definable event. An event is the result of a signal generated by the PA/5000 LT or received from an external device. Examples of events are media supply conditions, PA/5000 LT operational status, and product-detect signals.

Use the following procedure to configure the Discrete I/O board.

1. Press and hold ALT and Setup.
2. Type a valid password and press ENTER.
3. Scroll to select a setup option. Press ENTER when the LCD displays "D-Discrete Outputs" or "E-Discrete Inputs".
4. Scroll to display the Discrete I/O output or input requiring configuration and press ENTER. The PA/5000 LT contains two relay outputs, one solid-state output, and three opto-isolated inputs standard. Optionally, six solid-state outputs and four opto-isolated inputs can be added.
5. Scroll to display the output or input events, press ENTER to select the event. The user can select one of the 17 output events for each of the outputs and 10 input events for each of the inputs.

7.4 Output and Input Events

The following tables describe the Output and Input Events of the Discrete I/O board:

Output Events

1 - None	The output does not change during operation.
2 - Printer Error	The output changes when PA/5000 LT detects an error from the print engine.
3 - Media Out	The output changes when the PA/5000 LT detects the absence of either a ribbon or label supply.
4 - Media Low	The output changes when the PA/5000 LT detects that the ribbon or the label supply level is low.
5 - Broken Liner	The output changes when the PA/5000 LT does not detect label liner in the rewind path.
6 - Air Pressure Out	The output changes when the PA/5000 LT does not detect an adequate level of air pressure.
7 - Status On/Off	Reflects the current state of the machine; ON indicates a running machine, while OFF indicates a paused machine or an error at the machine.
8 - Printer Power	The output changes when the PA/5000 LT detects loss of power to the print engine.
9 - No Format to Print	The print queue of the print engine contains no stored label formats, and is empty. To resume printing, send a label format and quantity to the print engine.
A - All Errors	The output changes when the PA/5000 LT detects any external or internal error. The PA/5000 LT stops operation and requires immediate operator attention.
B - All Warnings	The output changes when the PA/5000 LT detects any external or internal warning. The PA/5000 LT continues operation and system displays the warning until the condition(s) is removed.
C - Cycle Complete	The output changes when the application cycle is complete and the label is not on the pad (successful application).
D - Cylinder Home	The output changes each time the tamp-cylinder returns to the home position.
E - Label Present	The output changes when the PA/5000 LT detects the presence of a label on a tamp pad. The signal is active when feeding the label as well.
F - Label Ready	The output changes when a label is on the pad, is present, and has been printed.
G - Reject	The output changes in conjunction with a Bad AB Scan input event and is mainly used to activate a Reject or Kick-out Station upon a bad barcode scan. When the TampTenna™ is installed, this can be used to activate the tag reject system upon programming a defective tag.

Output Events (Continued)

H - Shutdown	This output will toggle when the Shutdown Threshold (as defined on page 37) is exceeded.
I - Bad Scanner Read	Upon reading a bad scan, this event will be toggled for the duration of the Discrete Out Time (as defined on page 37).
J - Good Scanner Read	Upon reading a good scan, this event will be toggled for the duration of the Discrete Out Time (as defined on page 37).
K - Not Scannable	This is used for custom applications and is disabled in the current firmware.
L - Scanner Trigger	This is used for custom applications and is disabled in the current firmware.
M - Format Not Ready	This indicates that there is not a job in the printer, and therefore the unit cannot request a label print.
N - RFID Tag Good	This output toggles upon a successful tag encoding on the tamp pad.
O - RFID Tag Bad	This output toggles upon an unsuccessful tag encoding on the tamp pad.
P - RFID Tag Verify	This output toggles upon a successful tag read and comparison to original programmed content on the product.
Q - RFID Tag No Verify	This output toggles upon an unsuccessful tag read or failed comparison to the original programmed content on the product. This signal would be utilized to activate a downstream reject station to remove a product labeled with a defective RFID tag or a mis-applied tag.

Input Events

1 - None	The PA/5000 LT does not respond to a received input.
2 - On/Off Line	This input event alternates the PA/5000 LT between Pause mode and Run mode.
3 - Photocell 1	This input event provides a primary product detect signal for initiating the label application process.
4 - Photocell 2	This input event provides a secondary product detect signal for controlling an optional secondary wipe-down assembly or when an application requires two photosensors.
5 - Reject Label	This input event will turn the Air Assist on, the Vacuum off, and will blow the current label off the tamp pad.
6 - Warning Fault 1	This input event will light the yellow tier of the warning tower, display the Fault number in the LCD and resume normal operation.
7 - Warning Fault 2	This input event will light the yellow tier of the warning tower, display the Fault number in the LCD and resume normal operation.

Input Events (Continued)

8 - Warning Fault 3	This input event will light the yellow tier of the warning tower, display the Fault number in the LCD and resume normal operation.
9 - Error Fault 1	This input event will light the red tier of the warning tower, display the Error number in the LCD and stop operation.
A - Error Fault 2	This input event will light the red tier of the warning tower, display the Error number in the LCD and stop operation.
B - Error Fault 3	This input event will light the red tier of the warning tower, display the Error number in the LCD and stop operation.
C - Bad Scan A	This signal is used with the scanner output signal of Bad Scan.
D - Good Scan A	This signal is used with the scanner output signal of Good Scan.
E - Bad Scan AB	This is a combined signal of two scanners or two LT outputs of bad scan.
F - Reprint	This input activation requests that a re-printed label is created. On a Sato engine, this would extend the printer's job batch. On a Zebra engine, this would identically re-create the last label printed.
G - Select Format	Only for use with Sato printers. Use this signal line in conjunction with the Load Format signal to select a format to be recalled from the Sato's PCMCIA memory by the format's number reference. For example, toggling this line seven times while the Load Format signal is held active during the toggle counts will load format number 07 from the Sato printer's memory.
H - Load Format	Used in conjunction with the Select Format signal. Hold this line active while the Select Format line is toggled. De-activate this line to load the format, which is determined by the number of pulses received on the Select Format signal line. The maximum formats that can be recalled is 99.

Active Level - Failsafe

Using the Active Level option, the user can select the power-on active state for all output and input circuits of the PA/5000 LT. Enabling or disabling the failsafe option determines the active state of each output and input.

Outputs

Selecting YES sets each individual output to normally closed. If the selected event occurs, the output will open. Selecting NO sets each individual output to normally open. If the selected event occurs, the output will close. Diagraph recommends selecting YES and setting all three inputs to Failsafe Mode.

Inputs

Selecting YES sets the inputs to expect a voltage across the two input terminals. When the voltage is removed, the assigned event is triggered. Selecting NO sets up the opposite set of conditions. Diagraph recommends selecting YES and setting all three inputs to Failsafe Mode.

7.5 The Discrete I/O Interface Connection

Inputs and outputs of external devices connect to the wiring terminal located on the MCA.

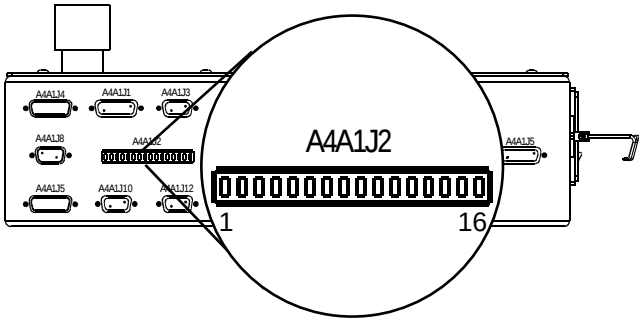

A4A1J2

1	INA+	Input A positive terminal
2	INA-	Input A negative terminal
3	INB+	Input B positive terminal
4	INB-	Input B negative terminal
5	INC+	Input C positive terminal
6	INC-	Input C negative terminal
7	K1NOP	Output 1 normally open signal
8	K1COM	Output 1 common signal
9	K2NOP	Output 2 normally open signal
10	K2COM	Output 2 common signal
11	VDC	24 VDC
12	OUT3	Solid State Output
13	COM	Solid State Common
14	24V Fused	24 V with fuse
15	GND	24 VDC Ground
16	GND	24 VDC Ground

7.6 Wiring Diagram Examples

Outputs

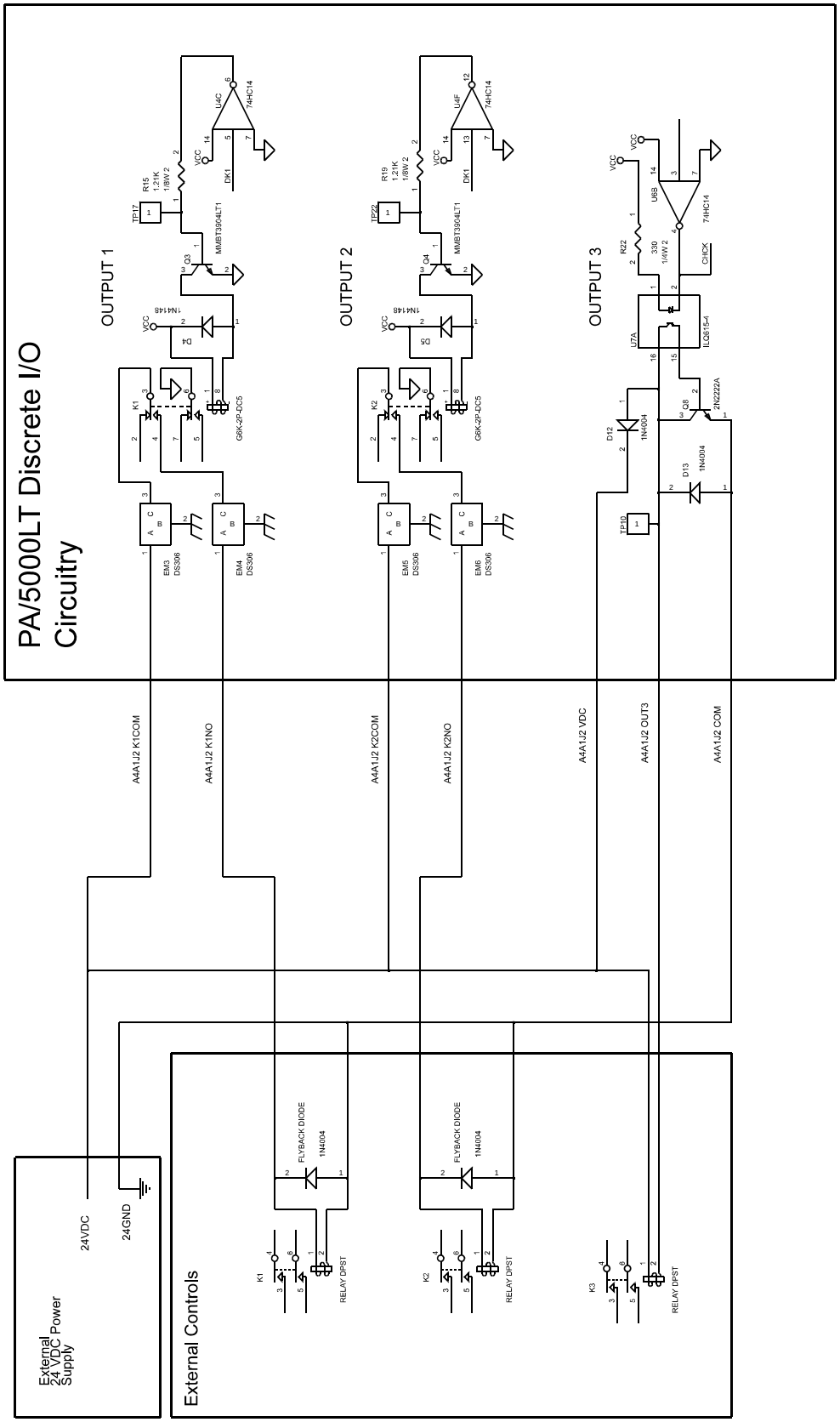

Inputs

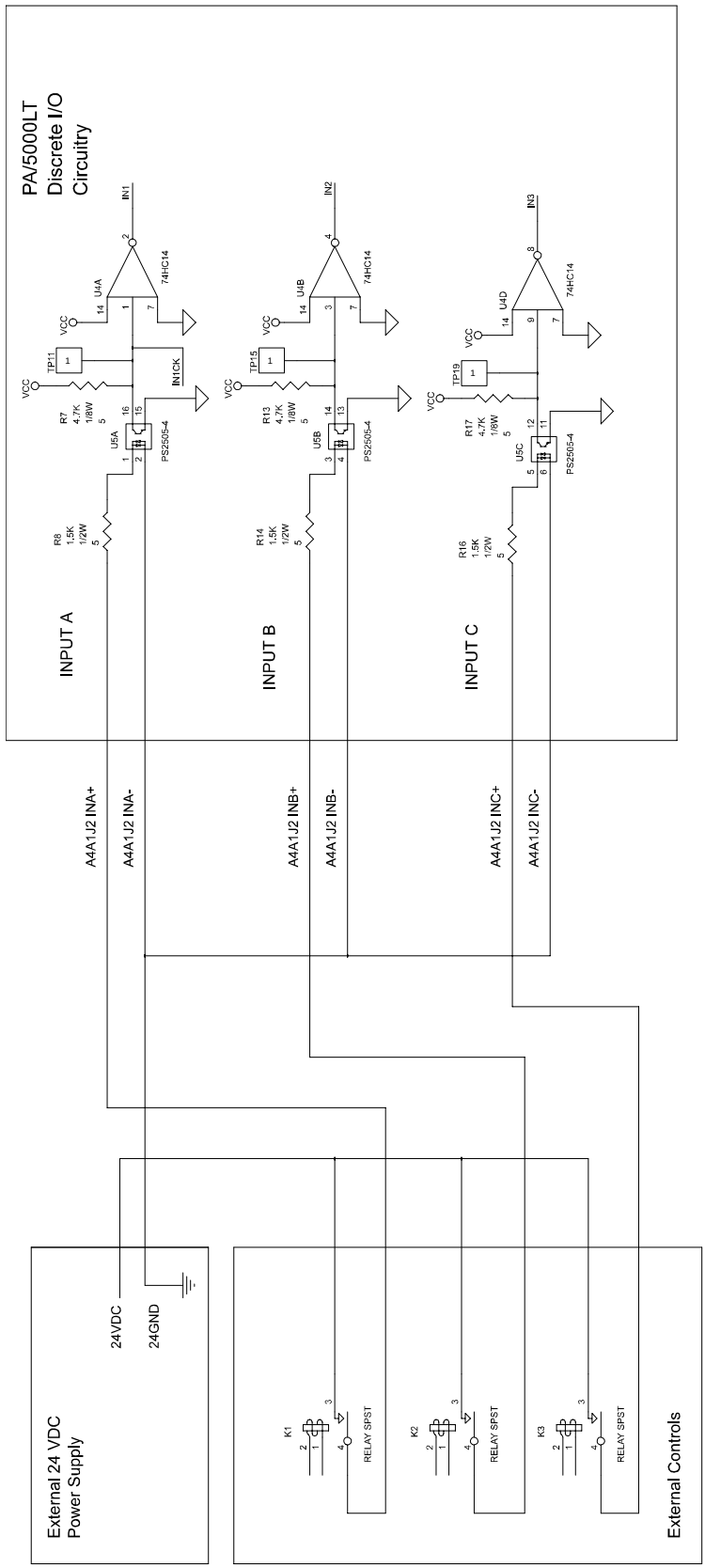
PA/5000LT
Discrete I/O
Circuitry
INPUT A
INPUT B
INPUT C
IN1
IN2
IN3
IN1CK
U4A
U4B
U4D
74HC14
U5A
U5B
U5C
PS2505-4
R7
R8
R13
R14
R16
R17
4.7K
1.5K
1/8W
1/2W
TP11
TP15
TP19
VCC
A4A1J2 INA+
A4A1J2 INA-
A4A1J2 INB+
A4A1J2 INB-
A4A1J2 INC+
A4A1J2 INC-
24VDC
24GND
External 24 VDC
Power Supply
K1
K2
K3
RELAY SPST
External Controls

Section 8: Print Engine Programming and Support

Diagraph designed the PA/5000 LT to work with a variety of print engines from different manufacturers. Each PA/5000 LT system includes all manufacturer-supplied user manuals and programming guides that shipped with the print engine.

8.1 Software

Diagraph supports EasyLabel® as the software for label creation and printing on the PA/5000 LT. It is a full-featured package that allows on-screen manipulation of text, graphics and bar codes to create labels. It works with all popular bar codes and bar code ratios. It supports all printer resident fonts as well as TrueType fonts, and includes database management. Call Diagraph at 800-722-1125 to obtain a copy.

8.2 Internet Addresses

Diagraph: www.diagraph.com

Datamax: www.datamaxcorp.com

Sato: www.satoamerica.com

Zebra: www.zebra.com

Tharo (EasyLabel): www.tharo.com

Section 9: Maintenance

9.1 Daily Maintenance

Clean the Printhead

- Clean with alcohol and swabs. Review the user's manual that came with the print engine for complete printhead cleaning procedures.

Clean the Air Filter

- Purge by cycling the OSHA valve ON and OFF.

9.2 Weekly Maintenance

Clean the Label Low Sensor on the Chassis

- Blow off with dry shop air to remove dust and debris.

Clean the Early Label Out Sensor on the Chassis

- Blow off with dry shop air to remove dust and debris.

Clean the Broken Liner Sensor on the Chassis

- Blow off with dry shop air to remove dust and debris.

Clean the Label Present Sensor on the Tamp Pad

- Blow off with dry shop air to remove dust and debris.

Clean the Auto-Retract Sensor on the Tamp Pad

- Blow off with dry shop air to remove dust and debris.

Follow any additional Weekly Maintenance Procedures recommended in the User's Manual for the Print Engine.

9.3 Monthly Maintenance

Clean the Label Low Sensor on the Chassis

- Clean with an alcohol swab.

Clean the Early Label Out Sensor on the Chassis

- Clean with an alcohol swab.

Clean the Broken-Liner Sensor on the Chassis

- Clean with an alcohol swab.

Clean the Spindles of Label Residue

- Clean with an alcohol swab.

Clean Tamp Pad of Label Residue

- Clean with an alcohol swab.

Clean the Air Assist Tube of Label Residue

- Clean with an alcohol swab.

Follow any additional Monthly Maintenance Procedures recommended in the User's Manual for the Print Engine.

9.4 Six Month Maintenance

Replace the Air Block Filter

- This filter is available in the Filter Kit, 6145-021.

Verify Tamp Pad and Air Assist Tube Alignment

- Clean with an alcohol swab.

Inspect Power Cords and Cables

- Replace when necessary.

Run Diagnostic Tests

- Perform Diagnostic Test found under the Diagnostic Menus.

Remove Labels and Clean Label Residue as Needed

- Clean with an alcohol swab.

Section 10: Troubleshooting

Attention to detail and common sense will greatly reduce the risk of accidents. For safety, always stop the conveyor before accessing Diagnostic menus on the handheld.

This machine has two energy sources and may need to be locked out during certain service procedures. Only electrically qualified maintenance personnel should work on this machine.

Whenever troubleshooting, always start by checking for error messages on the handheld display and on the print engine LCD. Print engine error messages appear in the user's manuals for the print engines.

10.1 Diagnostics

The handheld diagnostic menu explores every sensor and valve in the PA/5000 LT system. Most of the tests toggle between ON and OFF status.

Sensor Testing Operation of a sensor can be verified by covering it and observing a change in status on the display.

Valve Testing The ability to toggle a valve ON and OFF onscreen indicates that the valve is working and has been correctly cabled.

Cylinder Diagnostic Use caution when performing Cylinder and Wipedown diagnostics because these tests involve the extension and retraction of air cylinders.

During the Cylinder diagnostic, a letter appears on screen at lower right that identifies the cause of the cylinder retraction and cylinder home status:

A - The auto-retract sensor detected an object and signaled the cylinder to retract.

E - The cylinder reached the end-of-stroke sensor that signaled the cylinder to retract.

D - Dwell timeout occurred and signaled the cylinder to retract.

H - The cylinder home sensor detected the cylinder at the "home position."

Triple check the photosensor distance, application delay and encoder settings.

The Photosensor Distance (System Setup menu), Application Delay (Job Setup menu) and Line Speed control the timing of the cylinder stroke. A single change in any of these three variables can extend the cylinder in front of a box and damage the box or, if the box is heavy enough, the system itself.

Disable the secondary wipedown.

An air cylinder drives the secondary wipedown, so make sure that this feature is disabled when not in use. It is controlled through Accessories in the Job Setup menu.

Select the correct type and mode for Photosensor 1.

The System Setup menu enables selection of the type and activation mode of Photosensor 1. The choices are diffuse or retro-reflective; light-operated or dark-operated; and leading-edge trigger or trailing-edge trigger. Make sure that these settings correspond to the application.

Set a small tamp dwell time to guard against faulty settings.

With the auto-retract sensor enabled (Section “4.4 Job Setup Menu”), tamp dwell time can be used as a safeguard to guarantee proper cylinder retraction and avoid collisions with boxes. After all other parameters are set, set the Tamp Dwell Time to a sufficiently small value (60 milliseconds) so that the cylinder extends but does not reach any box. Start the conveyer with boxes. Even if a setting such as photosensor distance is incorrect, the short tamp dwell time allows adjustment of the faulty setting without damaging the box or the system. Once the faulty setting has been corrected, increase the tamp dwell time until the tamp pad touches the boxes.

10.2 Power Problems

The connections and cables identified by locations and part numbers in these notes appear on the diagram in Section "3.7 Cabling the System".

Problem: The display on the handheld is not lit.

Possible Cause: Loss of power.

Action:

1. Make sure that the power cord to the main controller assembly (MCA) is undamaged and plugged in.
2. Make sure that the power switch on the side of the MCA is turned ON.
3. Check the power fuse on inside of the MCA. For fuse replacement, order Diagraph Service Kit 6160-703.

Possible Cause: E-stop depressed.

Action:

Determine why the E-stop was used. If pressed as a test or by mistake, then turn it a quarter turn counterclockwise to unlock it. If pressed because of an error condition, then investigate the cause of the error before proceeding.

The machine is operational again when both the display on the handheld and the LCD on the print engine are lit and not displaying error messages. If the unit has a warning tower, it will show green when ready.

Problem: The handheld display reports "Printer Power."

Possible Cause: The print engine is without power.

Action:

1. Make sure that the power-interconnect cable from A4J2 on the MCA to the print engine AC IN connection is plugged in.
2. Make sure that the power-switch on the print engine is turned ON.
3. Check the power fuse on the back of the print engine. For fuse replacement, order Diagraph Service Kit 6160-703.

Possible Cause: Cable connections

Action:

Make sure that the Print Engine Interface Cable (Datamax: 6151-102, Sato: 6152-124, or Zebra: 6153-102) is properly connected between the MCA A4A2J5 and the print engine applicator cable connection (I/F).

10.3 Printing Problems

Note that the handheld display does not report individual print engine errors.

Problem: No power.

Action:

See Section "10.2 Power Problems" when the handheld display reports "Printer Power."

Problem: Print engine is not receiving label formats.

Possible Cause: Incorrect cabling

Action:

1. Make sure that the print engine communication cable (Datamax: 6151-107, Sato: 6152-101, or Zebra: 6153-122) is properly connected between MCA A4A2J7 and the print engine communication cable connection.
2. Make sure that the communication cable between handheld A4A2J9 and the PC or external communication device such as a PLC is connected.

Possible Cause: Communication settings of the print engine and the PC or LT are incompatible.

Action:

1. Refer to the print engine manual for correct serial communication setting.
2. Check the communication settings on the PC.

Possible Cause: Incorrect label format command structure.

Action:

Refer to the print engine manual for the label format commands and their proper structure.

Problem: The print engine does not print labels.

Possible Cause: System is in the Pause mode.

Action:

Clear all errors and press the Run button.

Possible Cause: Print engine is in the Pause mode.

Action:

Depending on the model of the print engine, press either the PAUSE or the LINE key to bring the printer back online.

Possible Cause: The print engine is not receiving Start-Print signal from the MCA.

Action:

1. Make sure that print engine applicator cable (Datamax: 6151-102, Sato: 6152-124, or Zebra: 6153-102) is properly connected between A4A2J5 on the MCA and the print engine applicator cable connection.
2. Make sure that the tamp applicator cable 6160-420 is properly connected between MCA A4A1J1 and the Applicator Assembly A3A1J1.

Possible Cause: Incorrect signal type chosen for the Start-Print signal.

Action:

Review the print engine manual, identify the Start-Print signal and set to compatible signal for current application.

Possible Cause: Demand-mode has been enabled.

Action:

Determine why the demand mode has been enabled. If set as a test or by mistake, disable it. See Section “4.4 Job Setup Menu” for details.

Possible Cause: Demand-mode has been enabled but the system is not receiving a signal from Photosensor 2.

Action:

1. Check the cable connection between the photosensor and connection A4A1J12 on the MCA.
2. Clean the photosensor lens with a soft-tipped swab and isopropyl alcohol.
3. Adjust and direct the Photosensor 2 at the product.
4. Adjust the sensing distance of the photosensor with the potentiometer at the rear of the photosensor.

Possible Cause: The label-present sensor is dirty or blocked.

Action:

Clean the sensor with a soft-tipped swab and isopropyl alcohol.

Problem: The print engine is feeding out blank labels.

Blank labels can be the result of a label problem, a ribbon problem, or a software problem.

Possible Cause: The ribbon is loaded incorrectly.

Action:

Compare the path of the ribbon with the path shown on the label inside the print engine housing.

Possible Cause: Wrong ribbon is loaded

Action:

Different print engines have different ribbon requirements. Make sure that the ribbon loaded in the print engine is compatible. Check the print engine manual or call Diagraph at 1-800-526-2531.

Possible Cause: Failed true type font and/or graphic download.

Action:

Check both the manual for the label-formatting software and the print engine manual. Verify parameters, reset, and try again.

Possible Cause: Low darkness setting

Action:

1. Check the label-formatting software manual for appropriate label darkness settings.
2. Check the print engine user interface darkness setting. Refer to the print engine manual for darkness setting procedures.

Possible Cause: Blank label format downloaded or verify stored label format is correct for PE type band rate.

Action:

Check the software manual for label formatting procedures.

Possible Cause: The ribbon and the label are incompatible

Action:

Unsatisfactory printing occurs when the print engine has been set for direct-thermal printing but has been loaded with labels that require a ribbon for good print contrast. To avoid this situation, make sure that the labels are designed for direct-thermal printing. If the print engine has been set to print with a ribbon in the thermal transfer mode, use Diagraph labels designed for thermal transfer printing.

Possible Cause: Right-hand vs. left-hand print engine driver configuration.

Action:

Refer to the label-format software manual for correct configuration.

Possible Cause: The ribbon is broken.

Action:

Check for error messages on the print engine display. Replace broken ribbon and check ribbon tension.

Possible Cause: The ribbon has been loaded upside down.

Action:

When the ribbon is loaded upside down, the ink adheres to the printhead and not to the label. Remove the ribbon and install it correctly.

Thermal Cause: The printhead temperature has been set too low.

Action:

See the user's manual for the print engine for printhead heat adjustments.

Software Causes: The message is blank, has incorrect parameters (such as Offset) or is requesting something the printer does not understand such as a special font or graphic.

Action:

Examine the message and all its requirements. If all print demands seem to fall within the capabilities of the print engine, run a test label. If the label still prints blank, exit the software and reenter. Try printing the label again. Often, a warm reboot will produce a successful printing.

Problem: The labels are only partially printed.

Probable Cause: The label Offset is set incorrectly.

Action:

See the section on Pitch Offset in the print engine user's manual.

10.4 Tamping Problems

The problems analyzed in this section are based on the premise that the print engine has successfully dispensed a label and that the label is adhering to the pad before the problem occurs.

Problem: Cylinder does not extend to apply label.

Action:

Clear all errors and press run/resume key.

Possible Cause: Tamp dwell time is too small.

Action:

1. The tamp dwell time must be set greater than 30 ms to extend the cylinder. If the dwell time is less than 30 ms, increase the value no more than 10 ms at a time.
2. Verify the operation of the cylinder with Diagnostics.
3. Adjust the tamp dwell-time using the procedure described in Section “4.4 Job Setup Menu”.

Possible Cause: Incorrectly positioned end-of-stroke sensor.

Action:

1. Verify the operation of the end-of-stroke sensor with Diagnostics.
2. Adjust the end-of-stroke sensor position using the procedure described in Section “5.2 Adjusting the Tamp Applicator”.

Possible Cause: Cylinder air pressure set too low.

Action:

Review Section “5.1 Pneumatic Adjustments”. Adjust the airflow to the cylinder with the PCM.

Possible Cause: Photosensor 1 does not respond when a product passes by.

Action:

1. Check the cable connection between the photosensor and connection A4A1J10 on the MCA.
2. Clean the photosensor lens with a soft-tipped swab and isopropyl alcohol.
3. Adjust and direct Photosensor 1 at the product.
4. Adjust the sensing distance of the photosensor with the potentiometer at the rear of the photosensor.

Possible Cause: Label-present sensor is not detecting a label on the tamp pad.

Action:

1. Verify the operation of the label-present sensor with Diagnostics.
2. Make sure that the sensor is slightly up and not flush with the bottom of the tamp pad.

Possible Cause: Cable connections.

Action:

1. Make sure that the Pneumatic Control Cable (6150-331) is properly connected between connection A4A1J4 on the MCA and A3A1J1 on the PCM.
2. Perform the vacuum valve diagnostic (Section “4.5 Diagnostics”). Verify the operation of the air assist valve. If the valve diagnostic fails, contact Diagraph Service for repair.

Possible Cause: Cylinder rods are bent.

Action:

Determine what caused the cylinder to bend and call Diagraph Service for replacement of the cylinder kit: 6150-831 for 12-inch cylinder assembly or 6150-832 for an 18-inch cylinder assembly.

Possible Cause: Cylinder airflow control is set incorrectly.

Action:

Review Section “5.2 Adjusting the Tamp Applicator”. Increase the airflow by turning the control counterclockwise and decrease by turning it clockwise.

Problem: Cylinder extends but retracts before reaching product.

Possible Cause: Tamp dwell time set too small.

Action:

1. The dwell time must be greater than 30 ms to extend the cylinder. If it is less than 30 ms, increase the value no more than 10 ms at a time.
2. Verify the operation of the cylinder with Diagnostics.
3. Adjust the tamp dwell-time using the procedure as described in Section “4.4 Job Setup Menu”.

Possible Cause: Auto-retract dwell time set too small for slow-descent cylinder stroke.

Action:

The auto-retract sensor cannot detect an object farther away than ¾-inch. A slow-descent cylinder stroke does not sustain enough momentum to reach the sensed product. If this is the case, increase the auto-retract dwell by no more than 10 ms at a time. Each time the auto-retract dwell changes, follow the instructions in Section “4.4 Job Setup Menu”.

Possible Cause: Incorrectly positioned end-of-stroke sensor.

Action:

1. Verify the operation of the end-of-stroke sensor with Diagnostics.
2. Adjust the end-of-stroke sensor position by following the instructions in Section “5.2 Adjusting the Tamp Applicator”.

Possible Cause: Cylinder air pressure set too low.

Action:

Review Section “5.1 Pneumatic Adjustments”. Adjust the airflow to the cylinder through the PCM.

Possible Cause: Cylinder airflow control is set incorrectly.

Action:

Review Section “5.2 Adjusting the Tamp Applicator”. Increase the airflow by turning the control counterclockwise and decrease by turning it clockwise.

Problem: Label does not adhere properly

Possible Cause: Tamp pad is not parallel to the product surface.

Action:

Review Section “5.2 Adjusting the Tamp Applicator”. Set the tamp pad so it can make parallel contact with the product by adjusting the chassis yoke.

Possible Cause: Tamp dwell time set too low.

Action:

1. The tamp dwell time must be greater than 30 ms to extend the cylinder. If the dwell time is less than 30 ms, increase the value no more than 10 ms at a time.
2. Verify the operation of the cylinder with Diagnostics.
3. Adjust the dwell-time using the procedure described in Section “4.4 Job Setup Menu”.

Possible Cause: Irregular product surface.

Action:

Adjust the product orientation or the system orientation to apply labels on a flat and solid surface of the product.

Possible Cause: Cylinder air pressure set too low.

Action:

See Section “5.1 Pneumatic Adjustments” to increase air pressure.

Possible Cause: Auto-retract dwell time set too small for slow-descent cylinder stroke.

Action:

The auto-retract sensor cannot detect an object farther away than ¾ inch. A slow-descent cylinder stroke does not sustain enough momentum to reach the sensed product. If this is the case, increase the auto-retract dwell by no more than 10 ms at a time. Each time the auto-retract dwell changes, follow the procedures described in Section “4.4 Job Setup Menu”.

Possible Cause: Cylinder airflow control is set incorrectly.

Action:

Review Section “5.2 Adjusting the Tamp Applicator”. Increase the airflow by turning the control counterclockwise and decrease by turning it clockwise.

Possible Cause: Vacuum pressure set too high.

Action:

Adjust the vacuum pressure (Section “5.1 Pneumatic Adjustments”).

Possible Cause: Label adhesive is not aggressive enough.

Action:

Call Diagraph for recommended label stock for the application.

Problem: The cylinder extends but does not retract the right way.

Possible Cause: Auto-retract sensor disabled.

Action:

1. Determine if the auto-retract sensor should be enabled or disabled.
2. If the sensor is to be enabled but is disabled, determine why it has been changed. If the sensor was disabled as a test or by mistake, enable the auto-retract sensor (Section “4.4 Job Setup Menu”).
3. If the sensor should be disabled, either reduce the dwell time (Section “4.4 Job Setup Menu”) or slide the end-of-stroke sensor to limit the cylinder stroke distance.
4. Carefully re-examine the above operation before running the conveyor.

Possible Cause: Auto-retract sensor is enabled but the auto-retract dwell time is too long.

Action:

1. Since the auto-retract dwell delays cylinder retraction, it also delays the auto-retract sensor's product detection. To compensate, reduce the auto-retract dwell by no more than 10 ms at a time.
2. Carefully re-examine the above operation before running the conveyor.

Possible Cause: Auto-retract sensor is not properly sensing the product.

Action:

The auto-retract sensor is a light-reflective device that may not be able to detect transparent products such as shrink-wrap or have difficulty sensing light from a rough surface. Adjust the product orientation or system orientation to apply labels on the best available product surface.

Problem: Cylinder extends but does not retract.

Possible Cause: Cylinder rods are bent.

Action:

Determine what caused the cylinder to bend and call Diagraph Service for replacement cylinder kit (6150-831 for 12-inch cylinder assembly or 6150-832 for an 18-inch cylinder assembly).

Possible Cause: Loss of cylinder air pressure.

Action:

1. Check that the OSHA valve is ON.
2. Verify that all pneumatic connections are secure. Closely examine the filter to the PCM and tamp pad.
3. Check the main pressure with the gauge in the PCM (Section “5.1 Pneumatic Adjustments”).

Problem: Label applied too early.

Possible Cause: Photosensor distance is set too short in the system.

Action:

1. Carefully measure the distance from the peel blade to Photosensor 1.
2. Verify the photosensor distance setting in the System Setup. Change if incorrect.
3. Carefully re-examine the above operation before running the conveyor.

Possible Cause: Incorrect setting for the photosensor type.

Action:

1. Determine the type of photosensor being used as Photosensor 1; review the choices provided in Section “4.3 System Setup Menu”.
2. Verify Photosensor 1 type setting in System Setup.
3. Carefully re-examine the above operation before running the conveyor.

Possible Cause: Incorrect setting for the photosensor edge.

Action:

1. Determine which edge is to be used to sense the product (leading or trailing).
2. Verify Photosensor 1 edge setting in System Setup.
3. Carefully re-examine the above operation before running the conveyor.

Possible Cause: Application Delay distance set too short.

Action:

1. Increase the application delay time by following the directions in Section “4.4 Job Setup Menu”.
2. Run sample labels to determine the change in label placement.
3. If necessary, continue to increase the application delay in small increments until the labels are applied correctly on the product.

Possible Cause: Incorrect product detection by Photosensor 1.

Action:

1. Check the cable connection between the photosensor and connection A4A1J10 on the MCA.
2. Clean the photosensor lens with a soft-tipped swab and isopropyl alcohol.
3. Adjust and direct Photosensor 1 at the product.
4. Adjust the sensing distance of the photosensor with the potentiometer at the rear of the photosensor.

Possible Cause: Incorrectly specified internal encoder speed.

Action:

1. Determine the actual conveyor speed. Use a tachometer if necessary.
2. Verify the speed setting as the internal encoder setting. Refer to Section “4.3 System Setup Menu”. Alter if needed.
3. Carefully re-examine the above operation before running the conveyor.

Possible Cause: Incorrect product detection by Photosensor 1.

Action:

1. Photosensor 1 may be detecting extraneous movement such as people or equipment moving near the conveyor.
2. Clean the photosensor lens with a soft-tipped swab and isopropyl alcohol.
3. Adjust and direct Photosensor 1 at the product.
4. Decrease the sensing distance of the photosensor with the potentiometer on the back of the photosensor.

Problem: Label applied too late.

Possible Cause: Photosensor distance set too long.

Action:

1. Carefully measure the distance from the peel blade to Photosensor 1.
2. Verify the photosensor distance setting in System Setup. Alter if necessary.
3. Carefully re-examine the above operation before running the conveyor.

Possible Cause: Incorrect setting for the photosensor type.

Action:

1. Determine the type of photosensor being used as Photosensor 1 - diffuse or retro-reflective sensor.
2. Verify Photosensor 1 type setting in System Setup. Change the setting if necessary.
3. Carefully re-examine the above operation before running the conveyor.

Possible Cause: Incorrect setting for the photosensor edge.

Action:

1. Determine which edge should be used to sense the product: leading or trailing.
2. Verify Photosensor 1 edge setting in System Setup. Alter if necessary.
3. Carefully re-examine the above operation before running the conveyor.

Possible Cause: Application delay distance set too long.

Action:

1. Decrease the application delay time by following the instructions in Section “4.4 Job Setup Menu”.
2. Run sample labels to determine the change in label placement.
3. If necessary, continue to decrease the application delay in small increments until the labels are applied correctly on the product.

Possible Cause: Incorrect product detection by Photosensor 1.

Action:

1. Photosensor 1 may be detecting extraneous movement such as people or equipment moving near the conveyor.
2. Clean the photosensor lens with a soft-tipped swab and isopropyl alcohol.
3. Adjust and direct Photosensor 1 at the product.
4. Adjust the sensing distance of the photosensor with the potentiometer on the back of the photosensor.

Possible Cause: Cylinder airflow control is set incorrectly.

Action:

Review Section “5.2 Adjusting the Tamp Applicator”. Increase the airflow by turning the control counterclockwise and decrease by turning it clockwise.

Possible Cause: Incorrectly specified internal encoder speed.

Action:

1. Determine the actual conveyor speed. Use a tachometer if necessary.
2. Verify the speed setting as the internal encoder setting (see Section “4.3 System Setup Menu”). Alter if necessary.
3. Carefully re-examine the above operation before running the conveyor.

Possible Cause: Cylinder air pressure set too low.

Action:

Increase the cylinder air pressure by following the instructions in Section “5.1 Pneumatic Adjustments”.

Possible Cause: Cylinder rods are bent.

Action:

Determine what caused the cylinder to bend and call Diagraph Service for replacement cylinder kit (6150-831 for 12-inch cylinder assembly or 6150-832 for 18-inch cylinder assembly).

Problem: Inconsistent label placement.

Possible Cause: Inconsistent product detection by Photosensor 1.

Action:

1. Check the cable connection between the photosensor and connection A4A1J10 on the MCA.
2. Clean the photosensor lens with a soft-tipped swab and isopropyl alcohol.
3. Adjust and direct the Photosensor 1 at the product.
4. Adjust the sensing distance of the photosensor by turning its potentiometer clockwise.

Possible Cause: Label is not adhering correctly.

Action:

1. If the label placement is skewed, adjust the tamp pad cylinder and alignment.
2. If the labels are not adhering firmly to the product due to inadequate tamp pressure, review section “5.1 Pneumatic Adjustments” and increase the tamp pressure.
3. If the label stock is incorrect, call Diagraph to order correct label stock.

Possible Cause: Cylinder rods are bent.

Action:

Determine what caused the cylinder to bend and call Diagraph Service for replacement cylinder kit (6150-831 for 12-inch cylinder assembly or 6150-832 for 18-inch cylinder assembly).

Problem: PA/5000 LT not applying labels on every product.

Possible Cause: Photosensor distance set too short.

Action:

1. Carefully measure the distance from the peel blade to Photosensor 1.
2. Verify the photosensor distance setting in the System Setup. Change if incorrect.
3. Carefully re-examine the above operation before running the conveyor.

Possible Cause: Conveyor line-speed too fast.

Action:

Conveyor line speed must be slowed to a speed that falls within the printing capability of the print engine.

Possible Cause: Photosensor distance is too long.

Action:

1. Move the photosensor closer to the print engine peel blade.
2. Measure the distance from the peel blade to the photosensor. Use a tape measure if necessary.
3. Change the photosensor distance setting in the System Setup.
4. Carefully re-examine the above operation before running the conveyor.

Possible Cause: Print engine is set to backfeed before printing, instead of after printing.

Action:

Check the print engine manual and configure the printer to backfeed after it prints.

Possible Cause: Intermittent product detection.

Action:

1. Check the cable connection between the photosensor and connection A4A1J10 on the MCA.
2. Clean the photosensor lens with a soft-tipped swab and isopropyl alcohol.
3. Adjust and direct the Photosensor 1 at the product.
4. Adjust the sensing distance of the photosensor with the potentiometer on the back of the photosensor.

Possible Cause: Print speed set too slow.

Action:

Increase the print speed of the print engine. See the print engine manual for instructions on how to change print speeds.

10.5 Label Feed Problems

Problem: Label does not feed to pad.

Possible Cause: Unit is in "Print on Demand" Mode.

Action:

1. Toggle Product Detector 2, if unit is to run in Demand Mode.
2. Change mode to Demand Mode Disabled.

Possible Cause: Label Present is covered.

Action:

Clean or uncover the Label Present Sensor.

Problem: Printer intermittently feeds two or more labels.

Possible Cause: Print is located at the trailing edge of the label, within the last 1/8 inch of the label, causing the Label Present to mis-read the label.

Action:

Move print outside of the 1/8 inch "Quiet Zone" of the trailing edge of the label.

10.6 Handheld Error and Warning Messages

A table of handheld display messages follows:

(Also see Section “4.2 Function Key Assignments”.)

Handheld Display	Message Type	Condition	To Clear
I/O Disabled	Error	The system will not run because the 24V relay has been turned off with the On/Off key.	Check for errors then turn on the 24 volts with the On/Off key.
Air Pressure Out	Error	The system does not have air pressure.	Check air valves and filter connections. Check the large gauge on the end of the Pneumatics Control Module. The pressure should register at least 60 psig (Section “5.1 Pneumatic Adjustments”). Press the run/resume key.
Broken Liner	Error	The broken-liner sensor does not detect liner threaded through the sensor.	Clean sensor. Re-thread liner. Press pause/stop then the run/resume key.
Cylinder Error	Error	Cylinder error occurs when the cylinder is in retraction mode and the home sensor does not "see" the cylinder home after 5 seconds; "stuck cylinder."	Check settings then press the run/resume key. Adjust air (tamp) pressure and stroke length. Verify no bent rods in tamp cylinder.

Early Label Out	Error	The early-label-out sensor did not detect liner threaded through the sensor.	Clean sensor. Re-thread liner. Press pause/stop then the run/resume key.
Label Low	Warning	The label supply is low. The label low sensor is active when it does not detect label stock.	Press pause/stop, add a new label spool if needed and press the run/resume key.
Label Out	Error	The printer detected the label out condition. See the printer manual for details.	Correct printer error and press the run/resume key.
Machine Error	Error	The printer reported an error to the MCA. Possible causes are the cover being left open or the head latch out of position.	Correct printer error and press the run/resume key.
Printer Power	Error	Power to the printer is OFF.	Turn ON power to print engine. Press the run/resume key.
Repeat Print Error	Error	The repeat print error is enabled and the printer attempted to print more than the specified number of labels consecutively without applying.	Check Label Present sensor with Diagnostics. Press the run/resume key.
Repeat Tamp Error	Error	The repeat tamp error is enabled and the system attempted to apply more than the specified number of labels consecutively without printing.	Check the tamp pad for a label then check the Label-Present sensor with diagnostics. Press the run/resume key.
Ribbon Low	Warning	The print engine detected a low ribbon supply. See the printer manual for details.	Press pause/stop, correct the printer error and press the run/resume key.
Ribbon Out	Error	The printer detected the ribbon out condition. See the printer manual for details.	Correct the printer error and press the run/resume key.
Wipedown Error (or) Warning	Error	This error message appears when the system has a wipedown unit and the applicator fails to apply a label. This warning will remain on the display and the warning tower will stay lit until the pause/play is pushed twice to resume system operation.	Refer to troubleshooting in the Wipedown Manual (5802-930).
Wipedown Timeout	Warning	This error message appears when the system has a wipedown unit and more than ten seconds elapses between the designated photosensor trip and the wipedown arm extension.	Refer to troubleshooting in Wipedown Manual (5802-930).
Wipedown Timeout Error	Error	This error message appears when the system has a wipedown unit and more than ten seconds elapses between the designated photosensor trip and the wipedown arm extension.	Refer to troubleshooting in Wipedown Manual (5802-930).

Section 11: Service Parts & Kits

DESCRIPTION	PART NO.	DRAWING REF.
E-Stop Switch Actuator & Mounting Flange	6150-513	(1)
Contact Block	6150-514	(2)
Board Kit, Communication, PA/5000LT	6160-708	(3)
Board Kit, Interface, PA/5000LT	6160-707	(4)
Board Kit, CPU, PA/5000LT	6160-706	(5)
Power Supply, PA/5000LT	9600-088	(6)
Power Module, 115/230 Volt	6105-397	(7)
Outlet, Female, IEC 320	6150-380	(8)
Spacer, Supply Shaft	6150-531	(9)
Supply Disk Assembly, Inner and Outer Supply	6150-213	(10)
Baseplate Assembly, Left Hand, PA/5000LT	6160-206X7L	(11)
Baseplate Assembly, Right Hand, PA/5000LT	6160-206X7R	(11)
Pneumatics Module, PA/5000LT	6160-201	(12)
Electric Rewind, PA/5000LT	6160-950	(13)
Guard, Rewind Belt	6145-692	(14)
Spacer, Round, 3/8"L x #8 ID	6145-693	(15)
Belt, Pulley, Rewind	6145-609	(16)
Bracket, Spindle to Motor	6145-694	(17)
Pulley, Rewind, 12 Groove, .20 Pitch	6145-648	(18)
Housing Assembly, Bearing, Unwind/Rewind	6145-655	(19)
Pivot Pin	6145-691	(20)
Bearing, Dancer	6145-687	(21)
Disk, Rewind, PA/5000LT	6160-968	(22)
Screw, 1/4-20 x 1/2, Socket Head Set, Cup Point, SS	5021-145	(23)
Spindle, Rewind, PA/5000LT	6160-388	(24)
Clasp, Rewind Liner, PA/5000LT	6160-387	(25)
Roller, Spindle	6150-348	(26)
Spring Collar, 5/8 ID	6105-066	(27)
Shaft, Spindle	6150-347	(28)
Bearing, Flange-Mounted (3/8")	6150-371	(29)
Bracket, Shaft Support	6150-525	(30)
Bearing, Flange-Mounted (5/8")	6150-372	(31)
Shaft, Supply	6150-340	(32)
Spring, Extension, 2.25L, 5/16D, .94 Lb/In	5331-220	(33)
Bushing, .25" ID Strain Relief	6105-546	(34)
Housing, Object Sensor	6150-394	(35)
Cable, Low Label Sensor, PA/5000LT	6160-545	(36)
Cover, Object Sensor	6150-376	(37)
Dowel Pin, 1/4" Dia x 1-1/4" L, SS	5315-208	(38)
Anchor, Extension Spring, 8-32	6150-600	(39)
Baseplate, PA/5000LT	6160-322	(40)
Bracket, Female Dovetail	6150-425	(41)

DESCRIPTION	PART NO.	DRAWING REF.
Bracket, Air Assist	6150-456	(42)
Tube, Air Assist	6150-454	(43)
Collar, One Piece Clamp-On	6145-689	(44)
Bumper, 5/8" Male, Polyurethane	6150-601S	(45)
Spacer, Delrin, Unwind/Rewind	6145-665	(46)
Spring, Extension, Unwind Dancer Arm	5331-221	(47)
Magnet, Rare Earth, Rewind	6145-667	(48)
Dancer Arm	6145-690	(49)
Switch Mounting Block	6150-375	(50)
Cable, Broken Liner Sensor, PA/5000LT	6160-547	(51)
Cable, Early Label Out Sensor, PA/5000LT	6160-546	(52)
Bumper, 1" Fem. Polyurethane	6150-466	(53)
Filter Kit	6145-021	N/A
Bulb Kit, Warning Tower, 24V, 5W, 3 per pkg.	6145-501	N/A
Engine Assembly, Datamax PE42	6150229-101	N/A
Engine Assembly, Sato 8485SE	6150229-207	N/A
Engine Assembly, Sato 8490SE	6150229-208	N/A
Engine Assembly, Sato 8460SE	6150229-209	N/A
Engine Assembly, Zebra 172 PAX2 (203 DPI)	6150229-302	N/A
Engine Assembly, Zebra 173 PAX3 (300 DPI)	6150229-304	N/A
Cable Kit, Tamp Cylinder	6150-800	N/A
Board Kit, Tamp Cylinder	6150-814	N/A
Spring Kit	6150-817	N/A
Tube Kit, Wide Web Air Assist	6150-818	N/A
Spindle Kit, Wide Web	6150-820	N/A
Warning Tower Kit	6150-828	N/A
Tamp Cylinder Kit, 12 Inch	6150-831	N/A
Tamp Cylinder Kit, 18 Inch	6150-832	N/A
Engine Assembly, Datamax PE43, PA/5000LT	6160229-102	N/A
Engine Assembly, Zebra 112 PAX4	6160229-308	N/A
Engine Assembly, Zebra 113 PAX4	6160229-309	N/A
Engine Assembly, Zebra 172 PAX4	6160229-310	N/A
Engine Assembly, Zebra 173 PAX4	6160229-311	N/A
Rewind Motor Board, Electric Rewind	6160-535	N/A
Handheld Unit, PA/5000LT	6160-702	N/A
Fuse Kit, PA/5000LT	6160-703	N/A
Sensor Kit, PA/5000LT	6160-704	N/A
MCA Unit, PA/5000LT	6160-705	N/A
Rewind Motor, Single Shaft Stepper	6160-941	N/A

11.1 PA/5000LT Controller

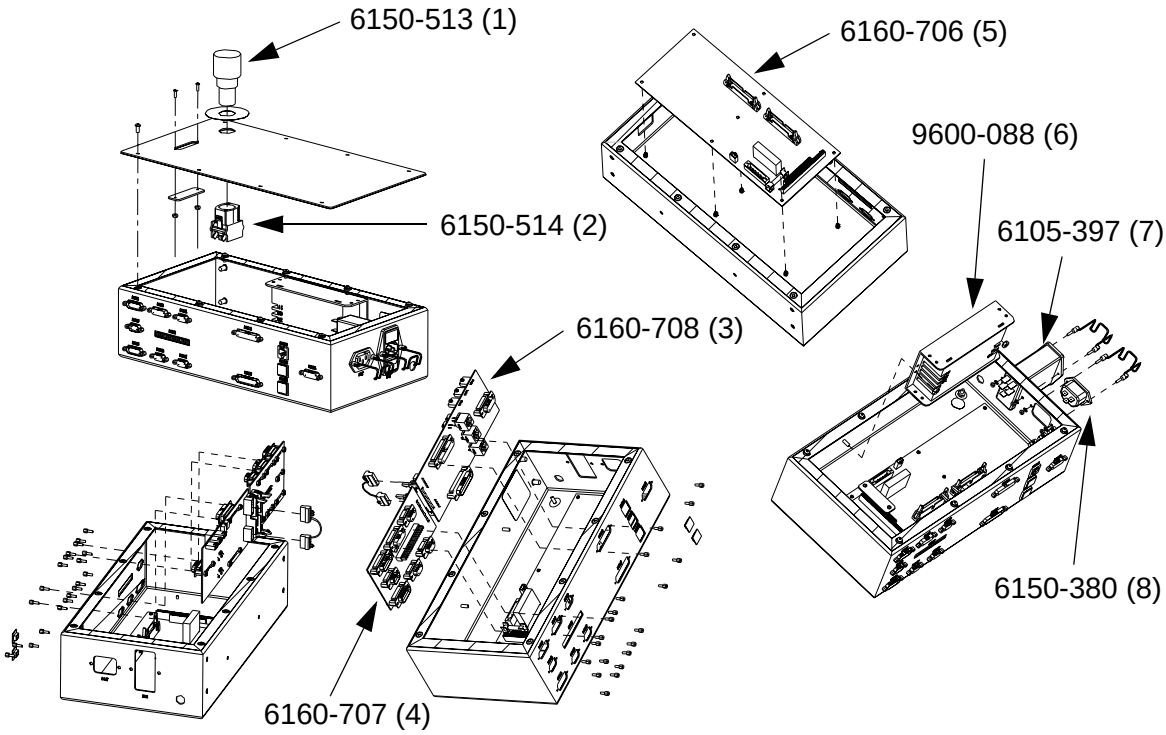

11.2 PA/5000LT Chassis Assembly

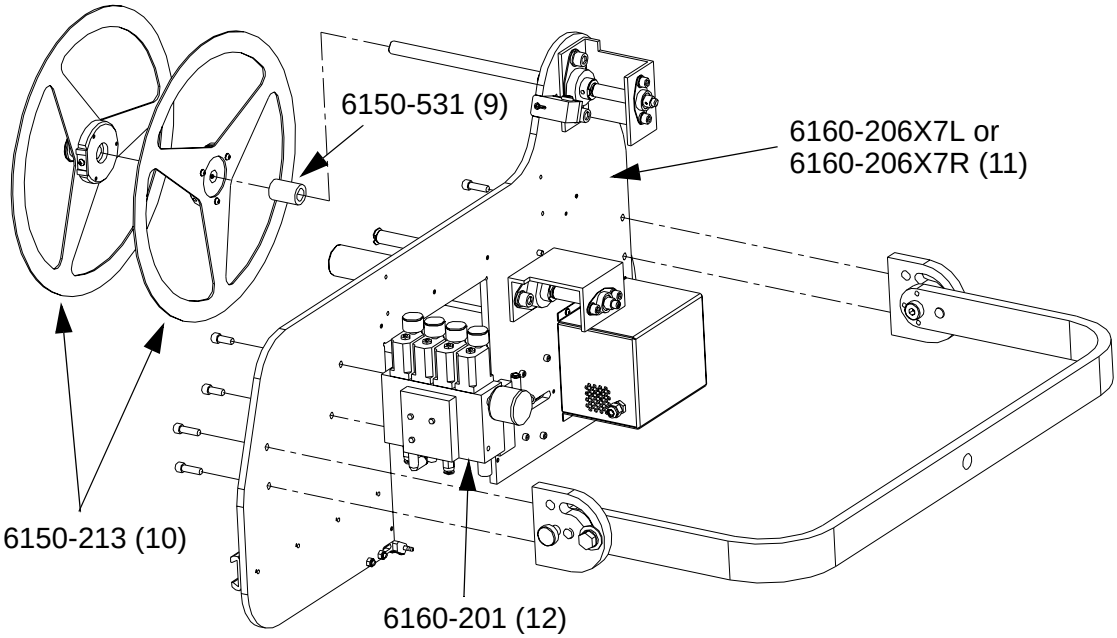

11.3 PA/5000LT Baseplate Assembly

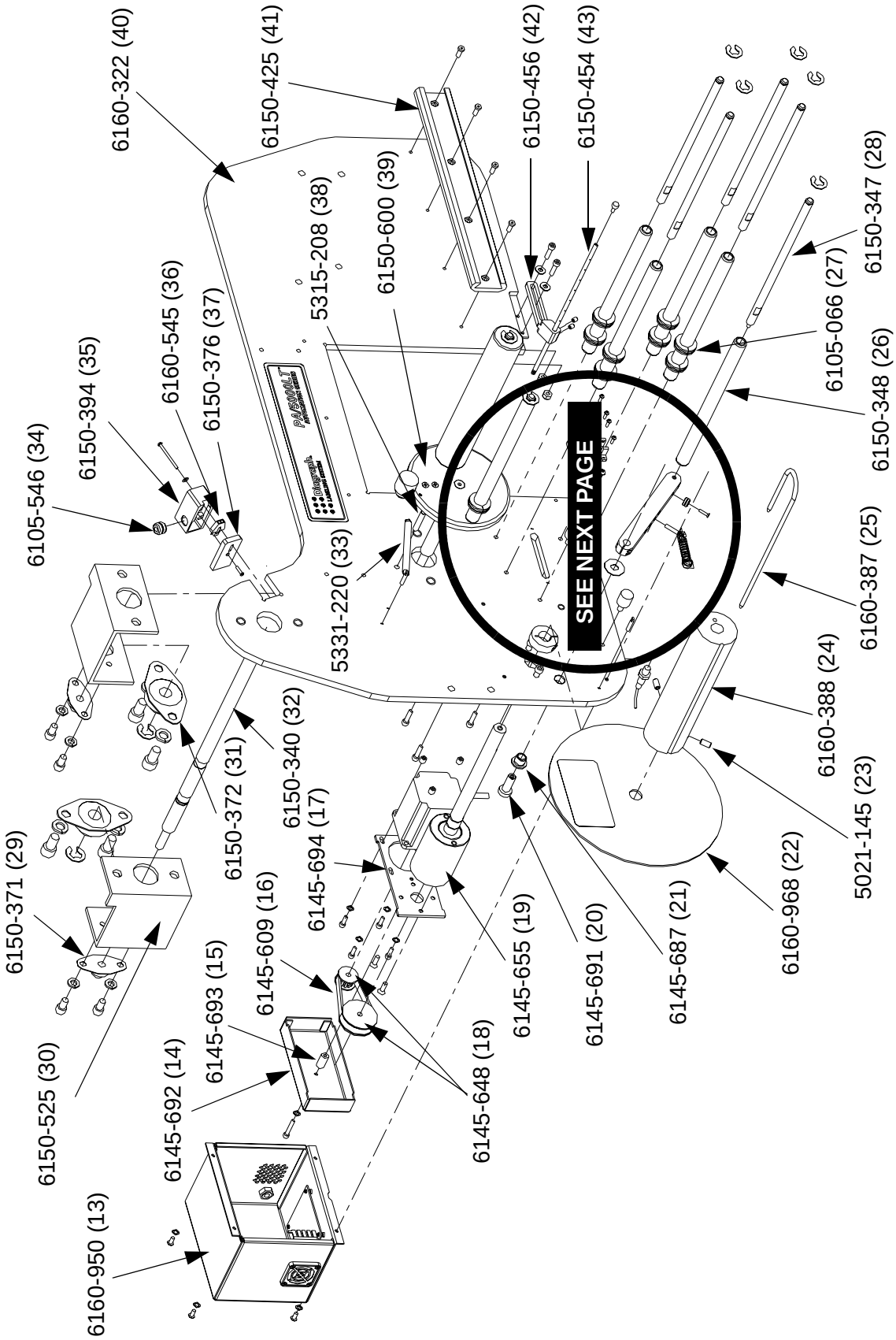

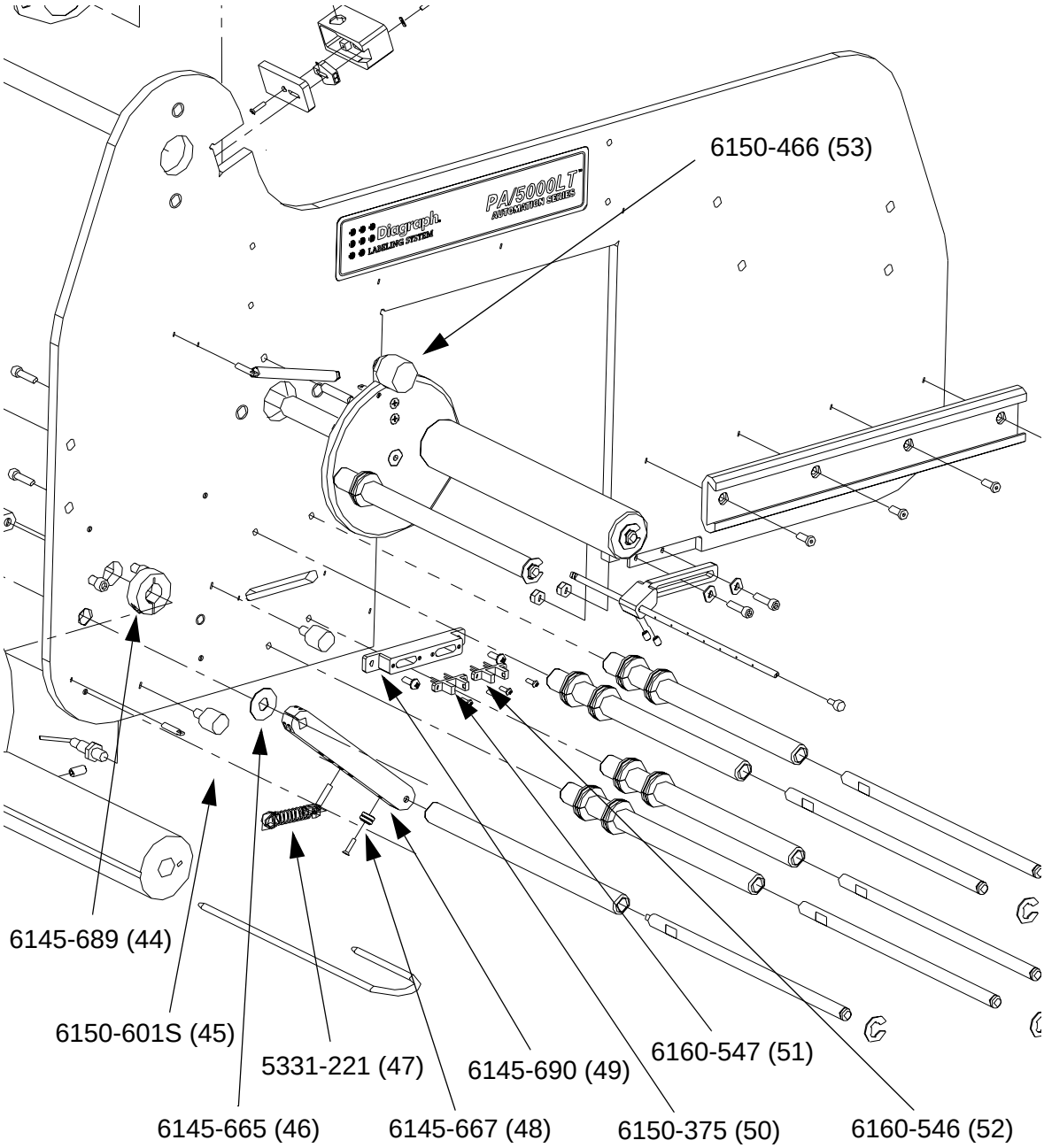
6150-466 (53)
PA/5000LT
AUTOMATION SERIES
Diagraph
LABELING SYSTEM
6145-689 (44)
6150-601S (45)
5331-221 (47)
6145-690 (49)
6160-547 (51)
6145-665 (46)
6145-667 (48)
6150-375 (50)
6160-546 (52)